BOSCH

Register your new device on MyBosch now and get free benefits: **bosch-home.com/welcome**

MyBosch

Washer dryer

WNC25410GB

[en] User manual and installation instructions

Further information and explanations are available online:

Table of contents

1 Safety 4
1.1 General information 4
1.2 Intended use 4
1.3 Restriction on user group 4
1.4 Safe installation 5
1.5 Safe use 6
1.6 Safe cleaning and maintenance 9

2 Preventing material damage 11

3 Environmental protection and saving energy 12
3.1 Disposing of packaging 12
3.2 Save energy and conserve resources 12
3.3 Energy saving mode 13

4 Installation and connection 13
4.1 Unpacking the appliance 13
4.2 Contents of package 13
4.3 Requirements for the installation location 13
4.4 Removing the transit bolts 14
4.5 Connecting the appliance 15
4.6 Aligning the appliance 16

5 Before using for the first time .. 17
5.1 Starting an empty washing cycle 17

6 Familiarising yourself with your appliance 19
6.1 Appliance 19
6.2 Detergent drawer 19
6.3 Control panel 20
6.4 Operating logic 20

7 Display 22

8 Buttons 25

9 Programmes 28

10 Accessories 32

11 Laundry 32
11.1 Preparing the laundry 32

12 Detergents and care products 32

13 Basic operation 33
13.1 Switching on the appliance ... 33
13.2 Setting a programme 33
13.3 Adjusting the programme settings 33
13.4 Saving the programme settings 33
13.5 Opening the door 34
13.6 Loading laundry 34
13.7 Starting the programme 34
13.8 Adding laundry 34
13.9 Cancelling the washing programme 35
13.10 Cancelling the drying programme 35
13.11 Unloading the laundry 35
13.12 Put the appliance into standby mode 35

14 Dryness level 35
14.1 Changing the dryness level ... 36

15 Childproof lock 36
15.1 Activating the childproof lock 36
15.2 Deactivating the childproof lock 36

16 Intelligent dosing system 36
16.1 Pouring liquid detergent and fabric softener into the dispensers 36
16.2 Using the manual dosing compartment 37
16.3 Adapting the ❀/💧 dispenser 37
16.4 Setting the basic dosage amount 37

17 Home Connect 38
17.1 Setting up the Home Connect app 38
17.2 Setting up Home Connect..... 38
17.3 Home Connect menu 38
17.4 Activating Wi-Fi on the appliance 39
17.5 Deactivating Wi-Fi on the appliance 39
17.6 Resetting the appliance network settings 39
17.7 Remote start..... 39
17.8 Data protection..... 39

18 Basic settings..... 40
18.1 Overview of the basic settings..... 40
18.2 Changing the basic settings..... 40

19 Cleaning and servicing 41
19.1 Cleaning the drum..... 41
19.2 Cleaning the detergent drawer..... 41
19.3 Cleaning the drain pump..... 43
19.4 Cleaning the intake opening in the rubber gasket..... 45

20 Troubleshooting..... 46
20.1 Emergency release 59

21 Transportation, storage and disposal 59
21.1 Removing the appliance 59
21.2 Inserting the transit bolts..... 59
21.3 Using the appliance again 59
21.4 Disposing of old appliance ... 60

22 Customer Service..... 60
22.1 Product number (E-Nr.), production number (FD) and consecutive numbering (Z-Nr.) 60
22.2 AQUA-STOP guarantee..... 61

23 Consumption values..... 62

24 Technical data 63

25 Declaration of Conformity 64

1 Safety

Observe the following safety instructions.

1.1 General information

- Read this instruction manual carefully.
- Keep the instruction manual and the product information safe for future reference or for the next owner.
- Do not connect the appliance if it has been damaged in transit.

1.2 Intended use

Only use this appliance:
- for washing machine-washable fabrics and hand-washable wool in accordance with the care label.
- with tap water and commercially available detergents and care products suitable for washing machines.
- for drying and freshening up fabrics that are washed with water and suitable for dryers.
- in private households and in enclosed spaces in a domestic environment.
- up to an altitude of max. 4000 m above sea level.

1.3 Restriction on user group

This appliance may be used by children aged 8 or over and by people who have reduced physical, sensory or mental abilities or inadequate experience and/or knowledge, provided that they are supervised or have been instructed on how to use the appliance safely and have understood the resulting dangers.
Do not let children play with the appliance.
Cleaning and user maintenance must not be performed by children unless they are being supervised.
Keep children under the age of 3 years and pets away from the appliance.

1.4 Safe installation

⚠ WARNING – Risk of electric shock!

Incorrect installation is dangerous.

- Connect and operate the appliance only in accordance with the specifications on the rating plate.
- Connect the appliance to a power supply with alternating current only via a properly installed socket with earthing.
- The protective conductor system of the domestic electrical installation must be properly installed. The installation must have a sufficiently large cross section.
- When using a residual current circuit breaker, only use a type with the ⊟ mark.
- Never equip the appliance with an external switching device, e.g. a timer or remote control.
- Never connect the appliance to a circuit that is regularly switched on and off by the energy supplier.
- When the appliance is installed, the mains plug of the power cord must be freely accessible. If free access is not possible, an all-pole isolating switch must be installed in the permanent electrical installation according to the installation regulations.
- When installing the appliance, check that the power cable is not trapped or damaged.

If the insulation of the power cord is damaged, this is dangerous.

- Never let the power cord come into contact with hot appliance parts or heat sources.
- Never let the power cord come into contact with sharp points or edges.
- Never kink, crush or modify the power cord.

⚠ WARNING – Risk of fire!

It is dangerous to use an extended power cord and non-approved adapters.

- Do not use extension cables or multiple socket strips.
- Only use adapters and power cords approved by the manufacturer.

- If the power cord is too short and a longer one is not available, please contact an electrician to have the domestic installation adapted.

⚠ WARNING – Risk of injury!
The high weight of the appliance may result in injury when lifted.
- Do not lift the appliance on your own.

⚠ WARNING – Risk of suffocation!
Children may put packaging material over their heads or wrap themselves up in it and suffocate.
- Keep packaging material away from children.
- Do not let children play with packaging material.

⚠ CAUTION – Risk of injury!
The appliance may vibrate or move when in use.
- Place the appliance on a clean, even, solid surface.
- Align the appliance using the appliance feet and a spirit level.

If hoses and power cords have been laid incorrectly, this causes a tripping hazard.
- Lay hoses and power cords in such a way that there is no risk of tripping.

If the appliance is moved by holding onto protruding components, such as the appliance door, the parts may break off.
- Do not move the appliance by holding onto protruding parts.

⚠ CAUTION – Risk of cutting!
Touching sharp edges on the appliance may lead to cuts.
- Do not touch the sharp edges on the appliance.
- Wear protective gloves when installing and transporting the appliance.

1.5 Safe use

⚠ WARNING – Risk of electric shock!
If the appliance or the power cord is damaged, this is dangerous.
- Never operate a damaged appliance.
- Never pull on the power cord to unplug the appliance. Always unplug the appliance at the mains.

- If the appliance or the power cord is damaged, immediately unplug the power cord or switch off the fuse in the fuse box and turn off the water tap.
- Call customer services. → *Page 60*

An ingress of moisture can cause an electric shock.

- Only use the appliance in enclosed spaces.
- Never expose the appliance to intense heat or humidity.
- Do not use steam- or high-pressure cleaners, hoses or sprays to clean the appliance.

⚠ WARNING – Risk of harm to health!

Children can lock themselves in the appliance, thereby putting their lives at risk.

- Do not install the appliance behind a door as this may obstruct the appliance door or prevent it from opening.
- With redundant appliances, unplug the power cord. Then cut through the cord and damage the lock on the appliance door beyond repair so that the appliance door will no longer close.

When spinning larger, waterproof items of laundry, imbalances may arise and lead to injuries.

- Do not wash and spin larger items of laundry, such as blankets or mattress covers, in the appliance.

⚠ WARNING – Risk of suffocation!

Children may breathe in or swallow small parts, causing them to suffocate.

- Keep small parts away from children.
- Do not let children play with small parts.

⚠ WARNING – Risk of explosion!

If there is coal dust or flour in the air around the appliance, this may cause an explosion.

- Keep the area around the appliance clean during operation.

⚠ WARNING – Risk of poisoning!

Detergents and care products may result in poisoning if consumed.

- If accidentally swallowed, seek medical advice.

- Keep detergents and care products out of the reach of children.

⚠ WARNING – Risk of explosion!

Highly flammable objects such as lighters or matches may ignite during the drying process.

- Remove all highly flammable objects from any pockets in your laundry before the drying process.

Unwashed laundry that has come into contact with solvents, oil, wax, wax remover, paint, grease or stain remover may ignite when drying is in progress.

- Do not place laundry in this appliance to be dried if the laundry has not been washed first.
- Rinse the laundry thoroughly with warm water and detergent before drying it in the machine.
- Do not use the appliance if industrial chemicals have been used to clean the laundry beforehand.

Laundry that has been pretreated with flammable cleaning agents that contain solvents may cause an explosion in the appliance.

- Rinse pretreated laundry thoroughly with water before washing.

⚠ WARNING – Risk of fire!

If drying is interrupted early, the laundry is not cooled sufficiently and may ignite.

- Do not interrupt the drying programme early.
- If drying is interrupted early, remove the laundry immediately and spread it out.

⚠ CAUTION – Risk of injury!

The covering plate may break if you stand on or climb onto the appliance.

- Do not stand on or climb onto the appliance.

The appliance may tip over if you sit on or lean against the open door.

- Do not sit on or lean against the appliance door.
- Do not place any objects on the appliance door.

Reaching into the drum while it is still turning may cause hand injuries.

- Wait for the drum to come to a complete stop before reaching inside.

⚠ CAUTION – Risk of scalding!

When you wash at high temperatures, the detergent solution gets hot.

- Do not touch the hot detergent solution.

⚠ CAUTION – Risk of chemical burns!

If the detergent drawer is opened, detergent and care products may spray out from the appliance. Contact with eyes or skin may cause irritation.

- Rinse eyes and/or skin thoroughly with clean water if they come into contact with detergents or care products.
- If accidentally swallowed, seek medical advice.
- Keep detergents and care products out of the reach of children.

1.6 Safe cleaning and maintenance

⚠ WARNING – Risk of electric shock!

Improper repairs are dangerous.

- Never make any technical modifications to the appliance or its features.
- Repairs to the appliance should only be carried out by trained specialist staff.
- Only use genuine spare parts when repairing the appliance.
- If the power cord of this appliance is damaged, it must be replaced by the manufacturer, the manufacturer's Customer Service or a similarly qualified person in order to prevent any risk.

An ingress of moisture can cause an electric shock.

- Before cleaning, pull out the mains plug or switch off the fuse in the fuse box.
- Do not use steam- or high-pressure cleaners, hoses or sprays to clean the appliance.

⚠ WARNING – Risk of injury!

The use of non-original spare parts and non-original accessories is dangerous.

- Only use the manufacturer's original spare parts and original accessories.

⚠ WARNING – Risk of poisoning!

Poisonous fumes may be given off if you use cleaning agents that contain solvents.

- Do not use cleaning agents that contain solvents.

2 Preventing material damage

ATTENTION!
The functionality of the appliance may be impaired if you use the wrong quantity of fabric softener, detergent, care product or cleaning agent.

- Follow the dosage recommendations from the manufacturer.

Exceeding the maximum load capacity impairs the function of the appliance.

- Observe the maximum load capacity for each programme and do not exceed it.
  → *"Programmes", Page 28*

Foam and foam rubber may deform or melt during the drying process.

- Do not dry laundry that contains foam or foam rubber.

The appliance is secured for transportation using transit bolts. Transit bolts which have not been removed may result in material damage and damage to the appliance.

- Before starting up the appliance, remove the transit bolts completely and keep them in a safe place.
- Before transport, fit the transit bolts fully in order to prevent damage in transit.

Material damage may be caused if the water inlet hose is connected incorrectly.

- Tighten the screw connections on the water inlet until they are hand-tight.
- Connect the water inlet hose directly to the water tap, without any additional connecting elements such as adapters, extensions or valves.
- Make sure that the valve housing for the water inlet hose does not come into contact with its surroundings and is not subjected to any external forces.
- Ensure that the inner diameter of the water tap is at least 17 mm.
- Make sure that the length of the thread on the connection to the water tap is at least 10 mm.

If the water pressure is too high or too low, the appliance may not be able to operate properly.

- Ensure that the water pressure in the water supply system is at least 100 kPa (1 bar) and max. 1000 kPa (10 bar).
- If the water pressure exceeds the maximum value specified, a pressure-reducing valve must be installed between the drinking water connection and the hose set of the appliance.
- Do not connect the appliance to the mixer tap of an unpressurised hot-water boiler.

Modified or damaged water hoses may result in material damage and damage to the appliance.

- Never kink, crush, modify or cut through water hoses.
- Only use the water hoses supplied with the appliance or genuine spare hoses.
- Never re-use water hoses that have been used before.

Operating the appliance using water that is dirty or too hot may lead to material damage and damage to the appliance.

- Only operate the appliance with cold mains water.

Unsuitable cleaning products may damage the surfaces of the appliance.

- Do not use harsh or abrasive detergents.

- Do not use cleaning products with a high alcohol content.
- Do not use hard scouring pads or cleaning sponges.
- Clean the appliance with nothing but water and a soft, damp cloth.
- Remove all detergent residue, spray residue or other residues immediately if they come into contact with the appliance.

3 Environmental protection and saving energy

3.1 Disposing of packaging

The packaging materials are environmentally compatible and can be recycled.

- Sort the individual components by type and dispose of them separately.

3.2 Save energy and conserve resources

If you follow these instructions, your appliance will use less electricity and less water.

Choose programmes with low temperatures and longer wash times and use maximum load capacity.

- ✔ Energy consumption and water consumption is most efficient.

Add detergent based on the laundry's degree of soiling.

- ✔ For light to normal soiling, a smaller amount of detergent is sufficient. Observe the dosage recommendation from the detergent manufacturer.

Reduce the washing temperature for lightly and normally soiled laundry.

- ✔ At lower temperatures, the appliance consumes less energy. For light to normal soiling, lower temperatures than indicated on the care label are also sufficient.

Set the maximum spin speed if you want to dry the laundry in the appliance afterwards.

- ✔ The drier the laundry, the shorter the programme duration when drying which, in turn, reduces energy consumption. A higher spin speed reduces the residual moisture in the laundry and increases the volume of the spin noise.

Wash the laundry without prewash.

- ✔ Washing with prewash increases the programme duration and increases energy and water consumption.

The appliance has a continuous automatic load adjustment function.

- ✔ Depending on the type of fabric and load capacity, the continuous automatic load adjustment function optimally adjusts the water consumption and programme duration.

The appliance comes with an AquaSensor.

- ✔ During the rinse cycle, the AquaSensor checks the degree of turbidity of the rinsing water, and adjusts the duration and number of rinse cycles accordingly.

3.3 Energy saving mode

If you do not use the appliance for an extended period, it automatically switches to energy-saving mode. Energy-saving mode ends when you use the appliance again.
If you do not continue operating the appliance, it automatically switches to standby mode.

4 Installation and connection

4.1 Unpacking the appliance

ATTENTION!
Objects remaining in the drum that are not designed for operation with the appliance may cause material damage and damage to the appliance.
- Remove these objects, along with all supplied accessories, from the drum before starting the appliance.

1. Remove any packaging and protective covers completely from the appliance.
   → *"Disposing of packaging", Page 12*
2. Check the appliance for visible damage.
3. Open the door. → *Page 34*
4. Remove any accessories from the drum.
5. Close the door.

4.2 Contents of package

After unpacking all parts, check for any damage in transit and completeness of the delivery.

ATTENTION!
If the appliance is operated with incomplete or defective accessories, the appliance may not be able to operate properly, or this may result in material damage or damage to the appliance.
- Do not operate the appliance with incomplete or defective accessories.
- Replace the accessories in question before operating the appliance.
  → *"Accessories", Page 32*

Note: The appliance has undergone a function test at the factory. This may cause water stains in the appliance, which the first wash cycle removes.

The delivery consists of the following:
- Washer dryer
- Accompanying documents
- Transit bolts
  → *"Removing the transit bolts", Page 14*
- Cover caps

4.3 Requirements for the installation location

⚠ **WARNING**
Risk of electric shock!
The appliance contains live parts. Touching live parts is dangerous.
- Do not operate the appliance without a cover cap.

⚠ **WARNING**
Risk of injury!
When using the appliance on a base, the appliance may tip over.
- Always secure the feet of the appliance to a base using the manufacturer's fixing brackets → *Page 32* before using the appliance for the first time.

ATTENTION!
If residual water in the appliance freezes, this may cause damage to the appliance.
- Do not install or operate this appliance anywhere that is liable to experience frost or outdoors.

If the appliance is tilted at an angle greater than 40°, residual water may leak out of the appliance and cause material damage.
- Tilt the appliance carefully.
- Transport the appliance in an upright position.

Installation location	Requirements
Base 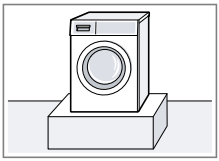	Secure the appliance with fixing brackets → *Page 32*.
Wooden joist floor 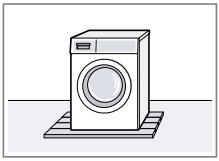	Place the appliance on a water-resistant wooden board (minimum thickness of 30 mm) which is screwed tightly to the floor.
Kitchen unit 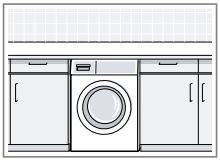	Only install the appliance underneath a continuous worktop that is securely connected to adjacent cabinets. Required niche width: 60 cm.
Against a wall 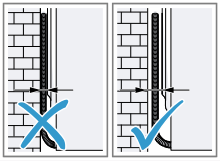	Do not trap the power cord or the hoses between the wall and the appliance.

4.4 Removing the transit bolts

The appliance is secured for transportation using transit bolts on the rear of the appliance.

Note: Keep the transit bolt screws and the sleeves in a safe place for future transport.
→ *"Inserting the transit bolts", Page 59*

1. Pull the hoses out of the holders.

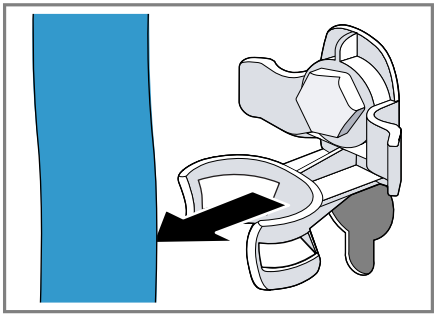

2. Unscrew ① and remove ② all of the screws for the 4 transit bolts using a WAF 13 wrench.

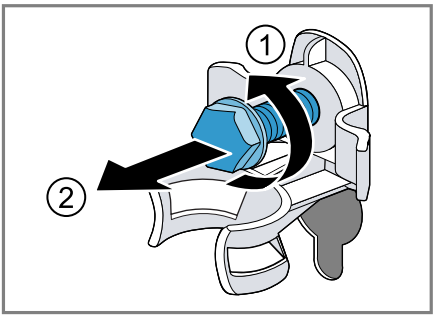

3. Remove the power cable from the holder.

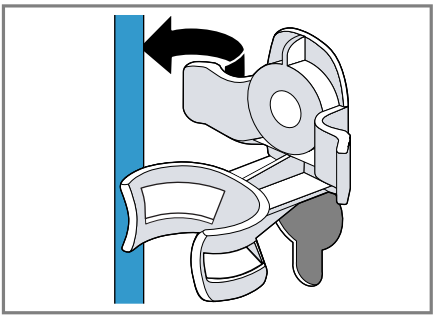

4. Remove the 4 sleeves.

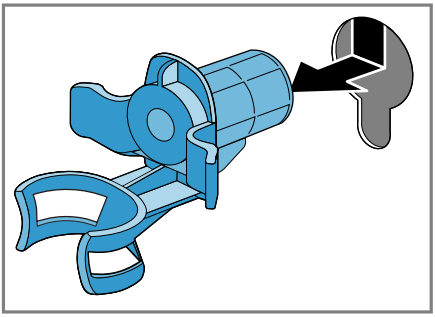

5. Put on the 4 cover caps.

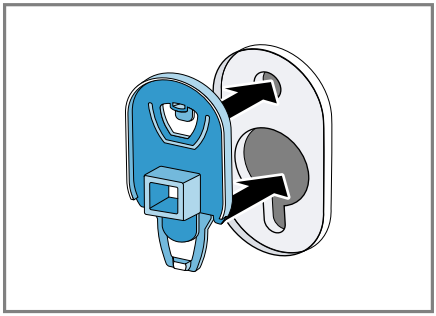

6. Push the 4 cover caps downwards.

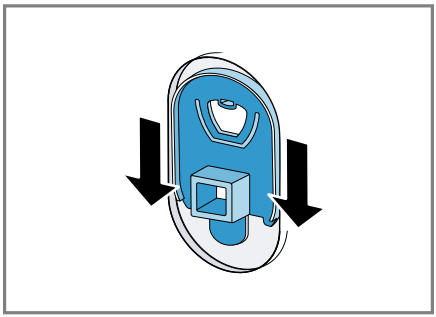

Note: To install the transit bolts to transport the appliance, perform these steps again in the reverse order.

4.5 Connecting the appliance

Connecting the water inlet hose

⚠ **WARNING**
Risk of electric shock!
The appliance contains live parts. Touching live parts is dangerous.
- Do not immerse the electrical AquaStop valve in water.

1. Connect the water inlet hose to a tap (26.4 mm = 3/4").

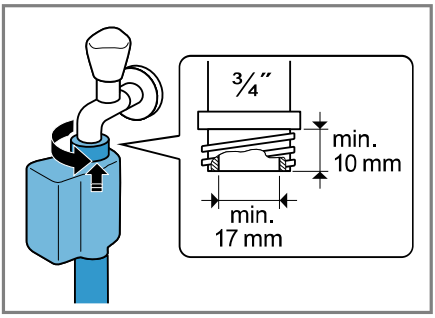

2. Open the water tap carefully and check that the connection points are tight.

Water outlet connection types

This information is intended to help you to connect this appliance to the water outlet.

ATTENTION!
When draining, the water outlet hose is subject to water pressure and may come loose from the installed connection point.
- Secure the water outlet hose against unintentional loosening.

Note: Observe the draining heights. The draining heights are: minimum: 60 cm, maximum: 100 cm

Siphon 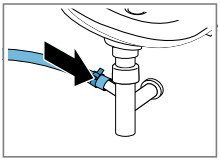	Secure the connection point with a (24–40 mm) hose clamp.
Sink 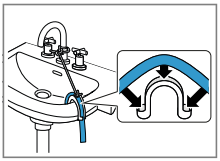	Fix and secure the water outlet hose with an elbow. → *"Accessories", Page 32*
Plastic pipe with rubber sleeve 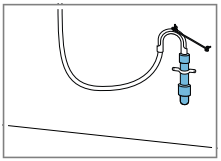	Fix and secure the water outlet hose with an elbow. → *"Accessories", Page 32*

Connecting the appliance to the electricity supply

Note: Your electrical domestic installation for this appliance must comply with the local legal provisions and safety regulations, and should include a residual current circuit-breaker.

1. Insert the mains plug of the appliance's power cable in a socket nearby.

   The connection details of the appliance can be found under Technical data → *Page 63*.
2. Check the mains plug is inserted properly.

4.6 Aligning the appliance

In order to reduce noise and vibration and to prevent the appliance from moving, align the appliance correctly.

1. Use a WAF 17 wrench to loosen the lock nuts in a clockwise direction.

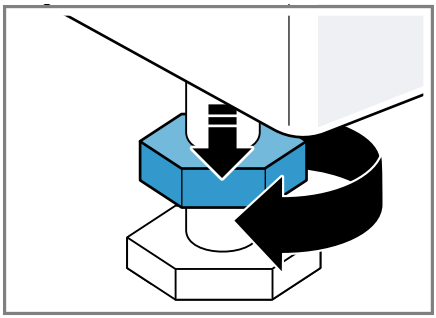

2. To align the appliance, turn the appliance feet. Check that the appliance is level using a spirit level.

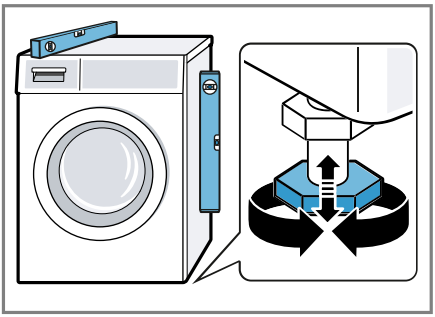

All appliance feet must stand firmly on the ground.

3. Use a WAF 17 wrench to tighten the lock nuts against the housing until they are hand-tight.

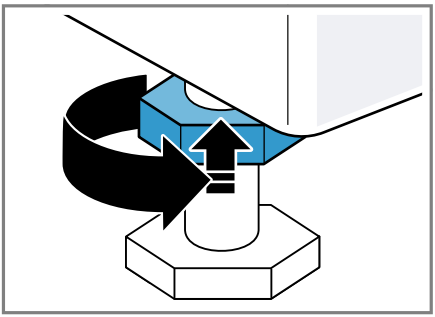

In doing so, hold the foot tight and do not adjust its height.

5 Before using for the first time

Prepare the appliance for use.

5.1 Starting an empty washing cycle

Your appliance was inspected thoroughly before leaving the factory. To remove any residual water, run the first wash cycle without any laundry.

1. Press ⏻.

   The switch-on process takes a few seconds.
2. Set the **Cottons 90°C** programme.
3. Close the door.
4. Pull out the detergent drawer.
5. Add washing powder containing oxygen bleach to the manual dosing compartment.

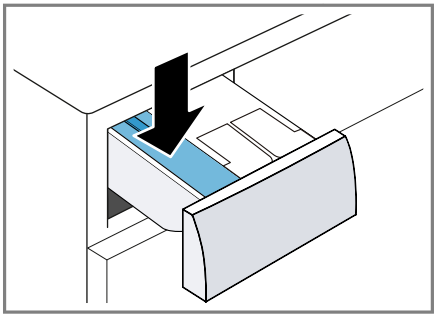

   To prevent foaming, use only half of the amount of detergent recommended by the detergent manufacturer for light soiling. Do not use detergent suitable for woollens or delicates.
6. Push in the detergent drawer.
7. Press ⏯ to start the programme.

✔ The display shows the remaining programme duration.

✔ After the programme has ended, the display shows: "End".

8. Start the first wash cycle or press ⏻ to put the appliance in standby mode.
→ *"Basic operation", Page 33*

6 Familiarising yourself with your appliance

6.1 Appliance

You can find an overview of the parts of your appliance here.

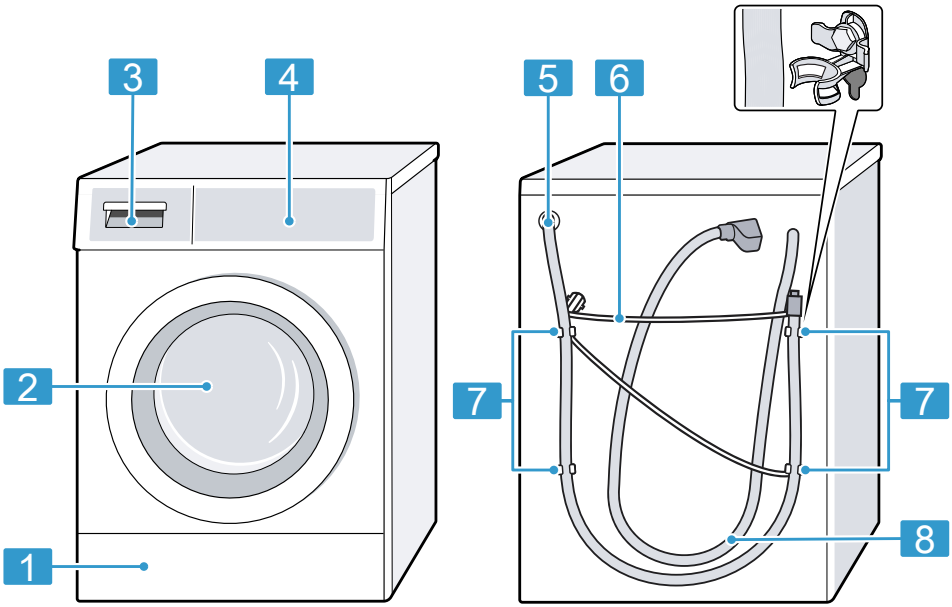

On certain models, specific details such as the colour and shape may differ from those pictured.

1	Maintenance flap for the drain pump → *Page 43*
2	Door
3	Detergent drawer → *Page 19*
4	Control panel → *Page 20*
5	Water outlet hose → *Page 16*
6	Power cord → *Page 16*
7	Transit bolts → *Page 14*
8	Water inlet hose → *Page 15*

6.2 Detergent drawer

Note: Observe the manufacturer's instructions on the use and dosage of the detergent and care product and the information in the programme descriptions.

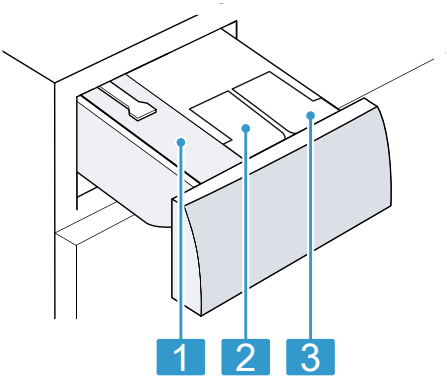

1	Manual dosing compartment → *"Using the manual dosing compartment", Page 37*
2	❀ / ♢: Dispenser for fabric softener or liquid detergent → *"Intelligent dosing system", Page 36*
3	♢: Dispenser for liquid detergent → *"Intelligent dosing system", Page 36*

6.3 Control panel

You can use the control panel to configure all functions of your appliance and to obtain information about the operating status.

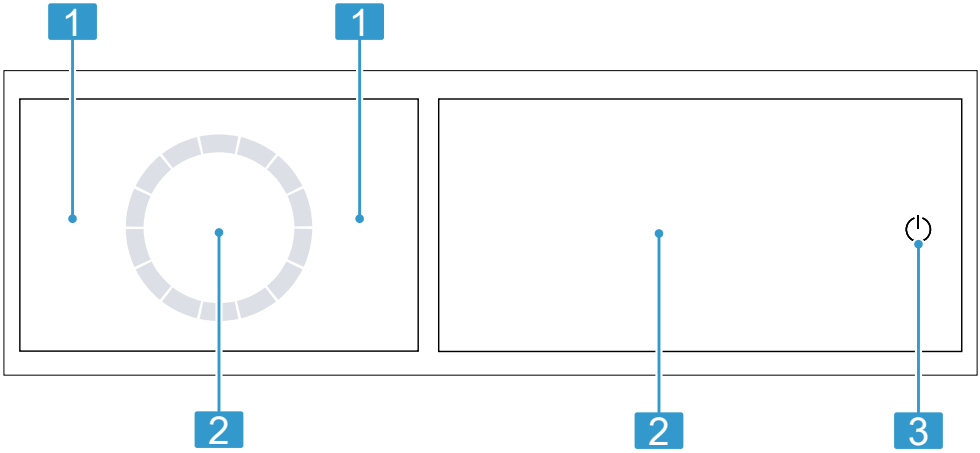

1	Programmes → *Page 28*
2	Buttons and display → *Page 22*
3	Buttons → *Page 25*

6.4 Operating logic

Some areas of the display are buttons and respond to touch. You can activate, deactivate or change set-

tings by pressing the buttons. The activated settings are highlighted brightly on the display.

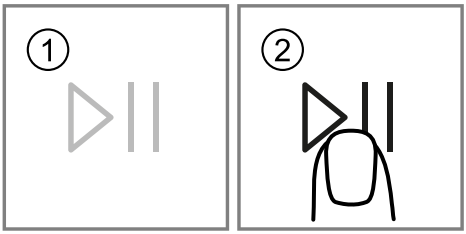

ATTENTION!
Pressing on the display with force may cause damage.
- Do not apply heavy pressure on the display.
- Do not press on the display using pointed or sharp objects.

Displaying or hiding additional buttons

Some buttons are hidden for a reduced display. If you display these additional buttons on the display, you can activate or deactivate the corresponding settings.

1. To display the additional buttons, briefly press **Options**.

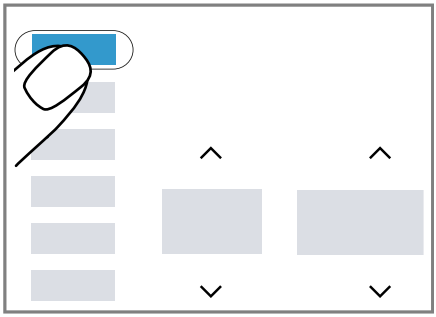

✔ The display shows all additional buttons.

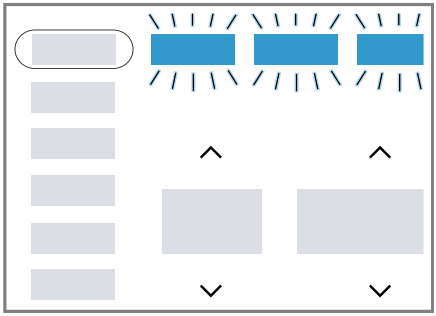

2. To hide the additional buttons, briefly press **Options** again.

Changing a setting value

If you activate certain settings, the display shows selection buttons and you can change the setting value.
- Press the selection buttons → *Page 25*.

  The display shows the setting value.

7 Display

The display shows the current settings, options or relevant information.

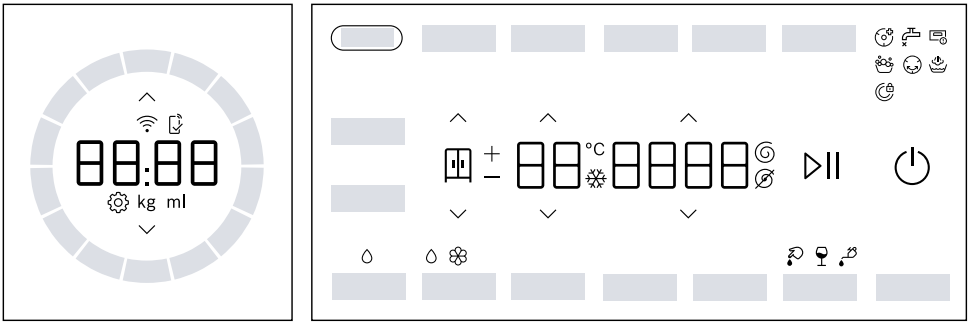

Example: Display

Display	Description
0:40 [1]	Expected programme duration or programme time remaining in hours and minutes.
8h [1]	Program end time → *"Buttons", Page 25*
6.0 [1]	Recommendation for the maximum load capacity for the selected program in kg.
∅ - 1400 ⊛	Set spin speed in rpm. → *"Buttons", Page 25* ∅: No spin cycle, draining only
❄ - 90	Set temperature in °C. → *"Buttons", Page 25* ❄ (cold)
End	Programme status: Programme end
	Programme status: Crease and odour reduction
	Programme status: Crease-reduction function
	The dryness level is activated.
+	The dryness level is activated.
-	The dryness level is activated.

[1] Example

Display	Description
	The "Blood" stain type is activated.
	The "Red wine" stain type is activated.
	The "Cooking fat/cooking oil" stain type is activated.
	Change the basic settings.
	Flashes: Drum cleaning is required. Run the Cottons 90°C programme for cleaning and caring for the drum and the outer tub. → *"Cleaning the drum", Page 41*
	■ Lights up: The appliance is connected to your home network via Wi-Fi. ■ Flashes: The appliance is trying to connect to your home network via Wi-Fi. → *"Home Connect ", Page 38*
	Settings that are not available on the appliance have been set via the Home Connect app. You can find more information in the Home Connect app.
	■ Lights up: The intelligent dosing system for liquid detergent is activated. ■ Flashes: The fill level of the dispenser is below the minimum level. → *"Intelligent dosing system", Page 36* (liquid detergent)
	■ Lights up: The intelligent dosing system for liquid detergent or fabric softener is activated. ■ Flashes: The fill level of the dispenser is below the minimum level. → *"Intelligent dosing system", Page 36* (liquid detergent) (fabric softener)
50 ml[1]	Basic dosage for detergent or fabric softener. → *Page 37*
:	Flashes: The voltage control system has paused the programme due to impermissible voltage drops or voltage surges. → *": flashes.", Page 48* **Note:** The programme continues when the voltage is permissible again.
	The appliance has detected too much foam. → *" ", Page 49*

[1] Example

Display	Description
	■ Lights up: The door is locked. – To add laundry, the door can be unlocked. → *"Adding laundry", Page 34* – To open the door, you can cancel the programme. → *"Cancelling the washing programme", Page 35* ■ Flashes: The door is not closed.
	■ No water pressure. → *"E:30 / -10 and/or ", Page 47* ■ The water pressure from the tap is too low.
	The detergent drawer has not been pushed in fully. → *" ", Page 48*
E:35 / -10[1]	Error code, error display, signal. → *"Troubleshooting", Page 46*

[1] Example

8 Buttons

The selection of programme settings depends on the programme that is set.

Button	Selection	Description
⏻ (mains switch)	■ Switch on ■ Standby mode ■ Restart the appliance	Switch on the appliance or put it in standby mode. If the control panel does not respond, press and hold ⏻ for approximately 5 seconds to restart the appliance. → *"The appliance is not working.", Page 50*
∧ ∨	Multiple selection	To change a setting, press the ∧ or ∨ selection button until the display shows the required setting.
∧ ∨	❄ - 90	Adjust the temperature. Set temperature in °C.
∧ ∨	∅ - 1400	Adjust the spin speed or deactivate the spin cycle. Set spin speed in rpm. If ∅ is selected, the water is drained and the spin cycle is deactivated. The laundry stays wet inside the drum.
▷II	■ Start ■ Cancel ■ Pause	Start, cancel or pause the programme.
◷ Finish in	Up to 24 hours	Set the programme end time. The programme duration is already included in the set number of hours. Once the programme has started, the programme duration is displayed.
Options	■ Displaying or hiding additional buttons	■ If you briefly press the button, you can display or hide additional buttons. → *"Displaying or hiding additional buttons", Page 21*
Options	Multiple selection	→ *"Basic settings", Page 40*
⏱ Speed Perfect	■ Activate ■ Deactivate	Activate or deactivate a shorter programme duration. **Note:** Energy consumption increases. The washing result is not affected by this.

Button	Selection	Description
Prewash	■ Activate ■ Deactivate	Activate or deactivate prewash, e.g. for washing heavily soiled laundry. **Note:** If the intelligent dosing system is activated, the detergent will be dispensed automatically for the prewash and the main wash. If the intelligent dosing system is deactivated, place the detergent directly in the drum for the prewash and into the manual dosing compartment for the main wash. → *"Detergent drawer", Page 19*
Extra Rinse	■ Activate ■ Deactivate	Activate or deactivate an additional rinse cycle. Recommended for particularly sensitive skin or in regions with very soft water.
Reduced Ironing	■ Activate ■ Deactivate	Activate or deactivate the reduced creasing programme. In order to reduce creasing in the laundry, the spin cycle and the spin speed are adapted. **Note:** The laundry has a higher residual moisture after washing. To reduce creasing, hang up the laundry immediately after washing.
3 sec.	■ Activate ■ Deactivate	→ *"Childproof lock", Page 36*
Favourite	■ Saving ■ Setting	Press the button for approx. 3 seconds to save your customised program settings. → *"Saving the programme settings", Page 33* If you briefly press the button, you can set customised program settings for your program.

Button	Selection	Description
Hygiene Care	■ Activate ■ Deactivate	Activate or deactivate gentle pretreatment of dry laundry with hot air up to 65 °C for increased hygiene demands. After the fabrics have been pretreated with hot air, they are washed at low temperatures. **Note:** The drum lighting remains active for up to approx. 10 minutes after the programme starts.
Anti Stain	Multiple selection	Select the type of stain. The temperature, drum movement and soaking time are all adjusted to suit the type of stain.
i-DOS 1	■ Activate ■ Deactivate ■ Setting the basic dosage amount	Briefly press the button to activate or deactivate the intelligent dosing system for liquid detergent. Press and hold the button for approx. 3 seconds to set the basic dosage. → *Page 37*
i-DOS 2	■ Activate ■ Deactivate ■ Adapting the dispenser ■ Setting the basic dosage amount	Briefly press the button to activate or deactivate the intelligent dosing system for fabric softener or liquid detergent. Press the button for approximately 3 seconds to adapt the contents of the / dispenser or set the basic dosage. → *"Intelligent dosing system", Page 36*
Dry	■ Activate ■ Deactivate	Activate or deactivate drying without washing beforehand.
Wash&Dry	■ Activate ■ Deactivate	Activate washing with subsequent drying.
∧ ∨	■ - ■ ■ +	The dryness level defines how damp or dry the laundry is after the programme ends.
Remote Start	■ Activate ■ Deactivate ■ Open the Home Connect menu	→ *"Remote start", Page 39*

9 Programmes

Note: The laundry's care labels provide you with additional information on programme selection.

Programme	Description	Max. load (kg) Wash	Max. load (kg) Drying
Cottons	Wash hard-wearing items made of cotton, linen or blended fabrics. Also suitable as a short programme for normally soiled laundry when you activate Speed Perfect. Programme setting: ■ Max. 90 °C ■ Max. 1400 rpm	10.0 5.0 [1]	6.0
Eco 40-60	Wash items made from cotton, linen or blended fabrics. **Note:** Fabrics which can be washed from 40 °C up to 60 °C as per the care symbol can be washed together. The washing performance corresponds to the best possible washing performance class according to the legal requirements. For this programme, the washing temperature is automatically adjusted depending on the load size, in order to achieve the best possible energy efficiency with the best possible washing result. You cannot change the washing temperature. Programme setting: **Note:** The temperature cannot be adjusted in this programme and is set automatically. ■ Max. - °C ■ Max. 1400 rpm	10.5	6.0
Delicates/Silk	Wash delicate, washable items made from silk, viscose and synthetic fabrics. Use a detergent that is suitable for delicates or silk.	2.0	– [2]

[1] **Speed Perfect** activated
[2] Drying not possible
[3] Washing not possible

Programme	Description	Max. load (kg) Wash	Max. load (kg) Drying
	Note: Wash especially delicate items or items with hooks, eyelets or clips in a mesh laundry bag. Programme setting: ■ Max. 40 °C ■ Max. 800 rpm		
Wool	Hand- or machine-washable items that are made from wool or contain wool. To prevent the laundry from shrinking, the drum moves the items very gently with long pauses. Use a detergent that is suitable for wool. Programme setting: ■ Max. 40 °C ■ Max. 800 rpm	2.0	1.0
Rinse	Rinse and then spin the laundry, and drain the water. Programme setting: Max. 1400 rpm	–	–
Spin/Drain	Spin the laundry and drain the water. If you only want to drain the water, activate . The laundry is not spun. Programme setting: Max. 1400 rpm	–	–
App	Select additional programmes directly via the Home Connect app. A description of the programmes can be found in the Home Connect app. **Note:** Your appliance must be connected to your home network and registered in your Home Connect app. → *"Home Connect ", Page 38*	–	–
Sportswear	Wash sports and leisure items made from synthetic fibres, microfibre or fleece. Use a detergent that is suitable for sports items. Do not use fabric softener. **Tip:** Use the programme to wash heavily soiled laundry.	2.0	2.0

[1] **Speed Perfect** activated
[2] Drying not possible
[3] Washing not possible

Programme	Description	Max. load (kg) Wash	Max. load (kg) Drying
	Programme setting: ■ Max. 40 °C ■ Max. 800 rpm		
Auto Soft	Wash delicate items made from cotton, or synthetic or blended fabrics. Gentle laundry care. The degree of soiling and the type of fabric are automatically detected. The washing process is adapted. **Note:** The temperature and spin speed cannot be adjusted in this programme and are set automatically. The maximum temperature is 30 °C. The maximum spin speed is 1000 rpm.	3.5	–[2]
Iron Assist	Reduce creases and airborne odours in suits, shirts, down-filled fabrics, outdoor clothing and items made of cotton, cashmere or silk. **Tip:** To prevent creasing, remove the laundry immediately after the programme has ended. **Notes** ■ The laundry is not dried or washed. ■ If you use the Iron Assist programme often without washing in between, this may cause odours in the appliance.	–[3]	1.0
Super Quick 15' Wash & Dry 45'	Wash and dry items made from cotton, linen, or synthetic or blended fabrics. Suitable for thin or light shirts, t-shirts or sports textiles. Short programme for small items of lightly soiled laundry. **Note:** If you only want to wash the laundry and not dry it, press Wash&Dry. Programme setting: ■ Max. 40 °C ■ Max. 1400 rpm	2.0	1.0

[1] **Speed Perfect** activated
[2] Drying not possible
[3] Washing not possible

Programme	Description	Max. load (kg) Wash	Max. load (kg) Drying
Mixed load	Wash items made from cotton, linen, or synthetic or blended fabrics. Suitable for lightly soiled laundry. **Tip:** Energy- and time-optimised programme using hybrid technology. Programme setting: ▪ Max. 60 °C ▪ Max. 1400 rpm	4.0	2.5
Easy Care	Wash items made from synthetic or blended fabrics. Suitable for lightly soiled laundry. **Tip:** Energy- and time-optimised programme using hybrid technology. Programme setting: ▪ Max. 60 °C ▪ Max. 1400 rpm	4.0	2.5

[1] **Speed Perfect** activated
[2] Drying not possible
[3] Washing not possible

10 Accessories

Use original accessories. These have been made especially for your appliance.

	Use	Order number
Water inlet hose extension	Extend the water inlet hose for cold water or AquaStop (approx. 2.50 m).	WMZ2381
Fixing brackets	Improves the stability of the appliance.	WMZ2200
Elbow	Secure the water outlet hose in place.	00655300
Washing machine cleaners	Cleaning products for maintaining the appliance interior.	00311929

11 Laundry

11.1 Preparing the laundry

ATTENTION!
Objects remaining in the laundry may damage the laundry and the drum.
- ▸ Remove all items from any pockets in your laundry before using the appliance.

Note
The appliance and fabrics are protected when you prepare your laundry.
- Brush off sand and soil
- Sort the laundry according to colour and textiles and observe the care labels
- Close all zips, hook and loop fasteners, hooks and eyes
- Tie cloth belts, cloth straps and cords together
- Remove curtain fittings and lead strips
- Wash small or particularly delicate items in a mesh washing bag
- Wash large and small items of laundry together
- Wash laundry with fresh stains immediately
- Pretreat laundry with dried stains and wash several times
- Load the laundry unfolded into the drum
- Spin the laundry before drying
- Before loading the drum, any laundry that has been pre-treated with chlorine bleach should be rinsed several times

12 Detergents and care products

The manufacturer's instructions for use and dosage can be found on the packaging.

Notes
- When using liquid detergents, only use liquid detergents that are self-flowing
- Do not mix different liquid detergents
- Do not mix detergent and fabric softener
- Do not use products that have expired or are highly congealed
- Do not use products containing solvents, caustic agents or volatile substances
- Do not use chlorine bleach

- Do not use dyes regularly as fixing salt can damage stainless steel
- Do not use color-bleaching agents in the appliance
- Do not pour vinegar into the dispensers → *Page 36* of the intelligent dosing system

13 Basic operation

13.1 Switching on the appliance

Note: If you switch the appliance on the first time after you have connected it to the electrical system, the switch-on process takes up to one minute.

Requirement: The appliance has been correctly installed and connected.
→ *"Installation and connection", Page 13*

- Press ⏻.

  The switch-on process takes a few seconds.
- ✔ An audible function test is carried out.

Note: The lighting for the drum goes out automatically.

13.2 Setting a programme

1. Press the required programme.
   → *"Programmes", Page 28*

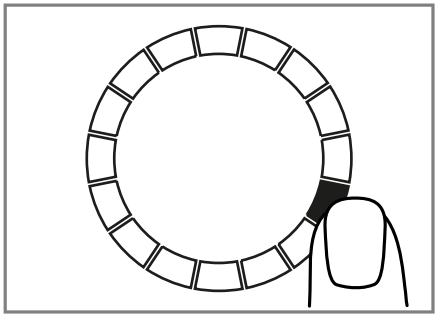

2. If required, adjust the programme settings. → *Page 33*

13.3 Adjusting the programme settings

Requirement: A programme is set.
→ *"Setting a programme", Page 33*

- Adjust the programme settings.
  → *"Buttons", Page 25*

  Observe the information about operating logic → *Page 20*.

Notes
- The programme settings are not saved permanently for the programme.
- The setting is saved if you activate or deactivate the intelligent dosing system.

13.4 Saving the programme settings

You can save your individual programme settings as favourites.

Requirements
- A programme is set.
  → *"Setting a programme", Page 33*
- The programme settings have been adjusted.
  → *"Adjusting the programme settings", Page 33*

- Press and hold **Favourite** for approx. 3 seconds.

  Press **Favourite** to call up the saved programme.

  Note: To overwrite the saved programme, repeat the steps above.

13.5 Opening the door

1. Press on the edge of the door.

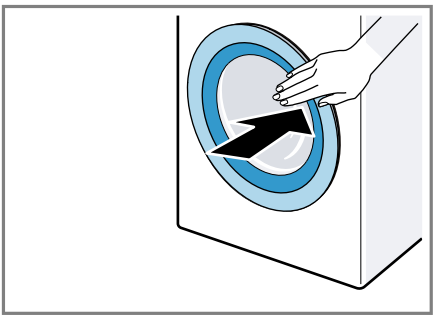

2. Open the door.

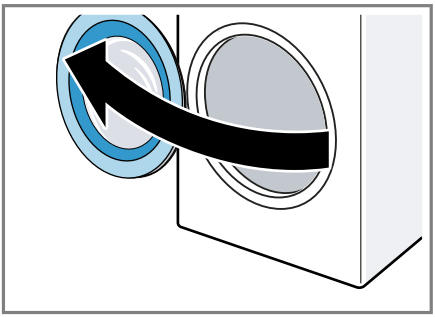

13.6 Loading laundry

Note: To prevent creasing, note the maximum load for the programmes.
→ *"Programmes", Page 28*

Requirements

- The laundry is prepared and sorted.
  → *"Laundry", Page 32*
- The drum is empty.

1. Open the door.
   → *"Opening the door", Page 34*
2. Place the laundry in the drum.
3. Close the door.

   Ensure that there is no laundry trapped in the door.

13.7 Starting the programme

Note: If the intelligent dosing system is activated, make sure that the dispensers have been filled → *Page 36* and the basic dosage has been set → *Page 37*.

Requirement: A programme is set.
→ *"Setting a programme", Page 33*

- Press ▷II.
- ✔ The drum rotates and load detection takes place. This can take up to 2 minutes, after which water enters the drum.
- ✔ The display shows the programme duration or the programme end time.
- ✔ After the programme has ended, the display shows: "End".

13.8 Adding laundry

After the programme starts, you can remove or add laundry depending on the programme status.

1. Press ▷II.

   During the washing cycle, the appliance pauses.
   During the drying cycle, the appliance checks whether it is possible to add laundry.

   Note: If you want to add laundry, follow the instructions on the display.
   → *"Display", Page 24*
2. Open the door.
   → *"Opening the door", Page 34*
3. Add or remove laundry.
4. Close the door.

5. Press ▷II.

13.9 Cancelling the washing programme

1. Press ▷II.
2. Open the door.

   The appliance door remains locked for safety reasons if the temperature and water levels are high.
   - If the temperature is high, start the **Rinse** programme.
   - If the water level is high, start the **Spin** programme or select a suitable programme for draining. → *"Programmes", Page 28*
3. Remove the laundry. → *Page 35*

13.10 Cancelling the drying programme

▸ Press ▷II.

The cooling process starts automatically after approx. 30 seconds and cools down the laundry for a few minutes while the drum is rotating. The door is then automatically unlocked.

13.11 Unloading the laundry

1. Open the door.
   → *"Opening the door", Page 34*
2. Remove the laundry from the drum.

13.12 Put the appliance into standby mode

1. Press ⏻.
2. Wipe the rubber gasket dry and remove any foreign objects.

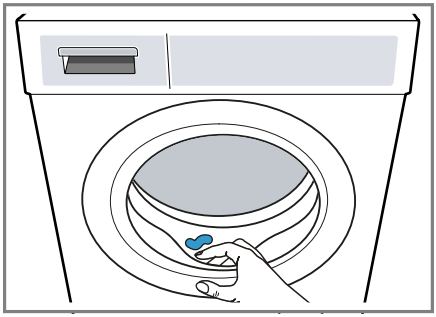

3. Leave the appliance door and detergent drawer open so that residual water can evaporate.

14 Dryness level

In some programmes, a dryness level is predefined. The dryness level defines how dry or damp your laundry is after the programme ends.

Dryness level	Description
+	For multi-layered, thick laundry that does not dry readily.
	For normal, single-layered laundry.
-	For normal, single-layered laundry. The laundry is still slightly damp after the programme ends. To prevent creasing after drying, iron the laundry or hang it up.

14.1 Changing the dryness level

For some programmes, you can change the dryness level so that your laundry will be drier or more damp.

1. Set a washing and drying programme or a drying programme. → *Page 28*

✔ The display shows the specified dryness level.

2. Press ∧ ∨.

✔ The display shows: ⊞ +, ⊞ or ⊞ -.

15 Childproof lock

Secure your appliance against being operated unintentionally using the controls.

15.1 Activating the childproof lock

▸ Press and hold ⊂⊃ **3 sec.** for approx. 3 seconds.

✔ The control elements are locked.

✔ The childproof lock also remains activated when the appliance is in standby mode and in the event of a power cut.

15.2 Deactivating the childproof lock

Requirement: To deactivate the childproof lock, the appliance must be switched on.

▸ Press and hold ⊂⊃ **3 sec.** for approx. 3 seconds.

16 Intelligent dosing system

The appliance's intelligent dosing system is activated at the factory and automatically doses liquid detergent and fabric softener for any programmes in which intelligent dosing is possible.

Note: You can use the buttons → *Page 25* to deactivate the intelligent dosing system, e.g. in order to manually dose washing powder → *Page 37*.

16.1 Pouring liquid detergent and fabric softener into the dispensers

If you are using the intelligent dosing system or if the appliance displays a notification during operation of the appliance, fill the dispensers.

Notes

- Only pour suitable liquid detergent and fabric softener into the dispensers. → *Page 32*
- If you add more liquid detergent or fabric softener to the dispenser, use the same product.
- If you want to replace the liquid detergent or fabric softener in the dispenser with another product, clean the detergent drawer beforehand → *Page 41*.
- If you are using the intelligent dosing system, do not add additional detergent or fabric softener into the compartment for manual dosing. This is to prevent overdosing or foam formation.

1. Pull out the detergent drawer.

2. Open the lid.

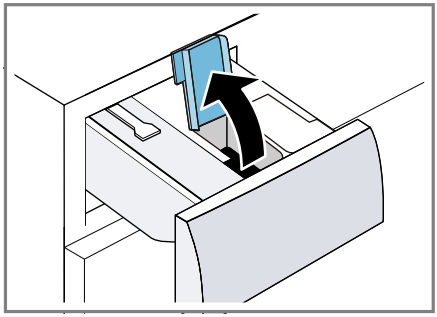

3. Pour liquid detergent ◊ and fabric softener ❀ into the relevant dispensers → *Page 19*.

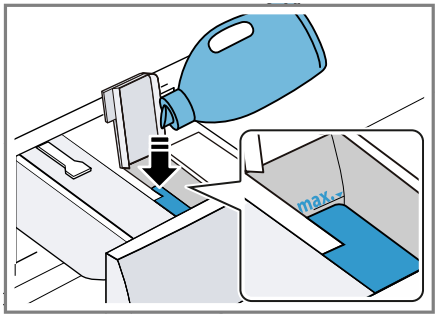

Do not exceed the marking for the maximum fill level when filling.

Note: You can also use both dispensers for liquid detergent. Adapt the dispenser for this. → *Page 37*

4. Close the lid.

Note: To prevent the liquid detergent or fabric softener from drying out, close the lids immediately after filling.

5. Push in the detergent drawer.

16.2 Using the manual dosing compartment

If you are not using the intelligent dosing system, if intelligent dosing is not possible for a programme, or if you want to add additional care product, e.g. stain remover or starch, use the manual dosing compartment.

Note: Observe the information about detergents and care products → *Page 32*.

1. Pull out the detergent drawer.
2. Pour laundry detergent or care product into the manual dosing compartment → *Page 19*.
3. Push in the detergent drawer.

16.3 Adapting the ❀/◊ dispenser

The ❀/◊ dispenser can dose fabric softener ❀ or liquid detergent ◊. When it leaves the factory, the dispenser is set for fabric softener. If you want to automatically dose a second liquid detergent, adapt the dispenser.

Notes

- If you adapt the contents of the dispenser, the basic dosage for this dispenser is reset.
- If you use both dispensers for liquid detergent, you must set a dispenser which is to be used during washing.
  → *"Buttons", Page 25*

1. Press and hold **i-DOS 2** for approx. 3 seconds.
2. Press **i-DOS 2** repeatedly until the display shows ◊ (liquid detergent) or ❀ (fabric softener).
3. Wait briefly to save the setting.

16.4 Setting the basic dosage amount

To allow for intelligent dosing, set the basic dosage amount for the dispenser. The basic dosage amount corresponds to the dosage recommendation from the detergent manu-

facturer on the packaging. Set the basic dosage amount that corresponds to the dosage recommendation for 4.5 kg of normally soiled laundry. In doing so, note the water hardness.

Tip: You can also set the basic dosage amount in the Home Connect app.

1. Press and hold **i-DOS 1** for approx. 3 seconds.
✔ The display shows the set basic dosage amount.
2. To adjust the setting, press ∧/∨.
3. Wait briefly to save the setting.

Note: To set the basic dosage amount for the other dispenser, repeat the steps with **i-DOS 2**.

17 Home Connect

This appliance is network-capable. Connecting your appliance to a mobile device lets you control its functions via the Home Connect app, adjust its basic settings and monitor its operating status.
The Home Connect services are not available in every country. The availability of the Home Connect function depends on the availability of Home Connect services in your country. You can find information about this at: www.home-connect.com.

The Home Connect app guides you through the entire login process. Follow the instructions in the Home Connect app to configure the settings.

Tip: Please also follow the instructions in the Home Connect app.

Notes

- Please note the safety precautions in this instruction manual and make sure that they are also observed when operating the appliance via the Home Connect app.
→ *"Safety", Page 4*
- Operating the appliance on the appliance itself always takes priority. During this time it is not possible to operate the appliance using the Home Connect app.

17.1 Setting up the Home Connect app

1. Install the Home Connect app on your mobile device.
2. Start the Home Connect app and set up access for Home Connect.

   The Home Connect app guides you through the entire login process.

17.2 Setting up Home Connect

Requirements

- The Home Connect app has been installed on your mobile device.
- The appliance is receiving signals from the WLAN home network (Wi-Fi) at its installation location.

1. Press and hold **Remote Start** for approx. 3 seconds.
2. Follow the instructions in the Home Connect app.

17.3 Home Connect menu

The Home Connect menu contains all of the Home Connect settings.

Calling up the Home Connect menu

▸ Press and hold **Remote Start** for at least 3 seconds.
✔ The display shows the first setting of the Home Connect menu.

Navigating in the Home Connect menu

- Briefly press **Remote Start** until the display shows the required setting.

Exiting the Home Connect menu

- Press and hold **Remote Start** for at least 3 seconds.

17.4 Activating Wi-Fi on the appliance

Requirements

- The Home Connect menu is called up. → *Page 38*
- The display shows "oFF".

- Press to change the setting.
- ✔ The display shows "on" if the Wi-Fi is activated.

Note: If the Wi-Fi is activated, the display alternately shows "on" and the signal strength of the Wi-Fi connection.

17.5 Deactivating Wi-Fi on the appliance

Requirements

- The Home Connect menu is called up. → *Page 38*
- The display shows "on".

- Press to change the setting.
- ✔ The display shows "oFF" if the Wi-Fi is deactivated.

17.6 Resetting the appliance network settings

Requirements

- The Home Connect menu is called up. → *Page 38*
- The display shows "rES".

- Press and hold for at least 3 seconds.
- ✔ The network settings are reset.

17.7 Remote start

Enable the appliance for remote start via the Home Connect app.

Note
Remote start will be deactivated in the following circumstances:

- The appliance door is opened.
- Following a power cut.

Activating remote start

Requirements

- The appliance door is closed.
- The detergent drawer has been pushed in.

- Press **Remote Start**.
- ✔ **Remote Start** lights up and the appliance is enabled for remote start via the Home Connect app.

Deactivating remote start

- Press **Remote Start**.
- ✔ **Remote Start** goes out.

17.8 Data protection

Please see the information on data protection.
The first time your appliance is registered on a home network connected to the Internet, your appliance will transmit the following types of data to the Home Connect server (initial registration):

- Unique appliance identification (consisting of appliance codes as well as the MAC address of the Wi-Fi communication module installed).
- Security certificate of the Wi-Fi communication module (to ensure a secure data connection).

- The current software and hardware version of your appliance.
- Status of any previous reset to factory settings.

This initial registration prepares the Home Connect functions for use and is only required when you want to use the Home Connect functions for the first time.

Note: Please note that the Home Connect functions can only be utilised with the Home Connect app. Information on data protection can be retrieved in the Home Connect app.

18 Basic settings

You can configure the basic settings for your appliance to meet your needs.

Note: You can also adjust the the basic settings in the Home Connect app.

18.1 Overview of the basic settings

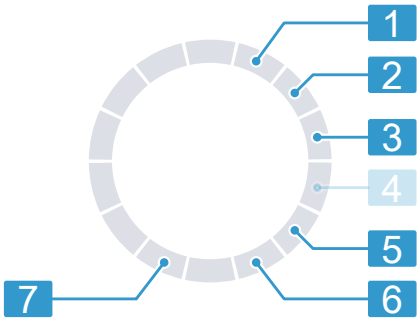

Programme selector with programme positions

1	Set the volume of the signal at the end of the programme: 0 (off) to 4 (very loud)
2	Set the volume of the signal tone emitted when the buttons are pressed: 0 (off) to 4 (very loud)
3	Set the display brightness: 1 (low) to 4 (very high)
5	Activate (On) or deactivate (OFF) the reminder to clean the drum.
6	Display the number of finished programmes.
7	Restore the appliance to the factory settings (rES).

18.2 Changing the basic settings

1. To call up the basic settings, press and hold **Options** for approx. 3 seconds.
✔ The display shows ⚙.
2. Use the programme selector to select the required basic setting. → *Page 40*
3. Adjust the basic setting:
   – To change the value, press ∨ or ∧.
   – To reset the appliance to the factory settings, press and hold ▷II for approx. 3 seconds.
4. To save the changes, switch off the appliance.

19 Cleaning and servicing

To keep your appliance working efficiently for a long time, it is important to clean and maintain it carefully.

19.1 Cleaning the drum

⚠ **CAUTION**
Risk of injury!
Permanently washing at low temperatures and a lack of ventilation for the appliance may damage the drum and cause injury.

- Regularly run a programme for cleaning the drum or wash at temperatures of at least 60 °C.
- Leave the appliance to dry after every operation with the door open, and leave the detergent drawer to dry.

- Run the **Cottons 90°C** programme without laundry but with washing powder that contains oxygen bleach or a a cleaning agent for caring for the inside of the appliance.
  → *"Accessories", Page 32*

19.2 Cleaning the detergent drawer

If you want to replace the liquid detergent or fabric softener in the dispenser with another product or if the detergent drawer is dirty, clean the detergent dispenser.

ATTENTION!
The pump unit contains electrical components. Electrical components may be damaged if they come into contact with liquids.

- Do not clean the pump unit in the dishwasher and do not immerse it in water.
- Protect the electrical connection on the rear against water, detergent and fabric softener residue.

1. Put the appliance into standby mode.
   → *"Put the appliance into standby mode", Page 35*
2. Pull out the detergent drawer.
3. Press down on the insert and remove the detergent drawer.

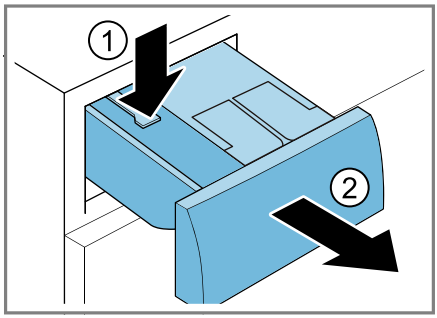

4. Remove the pump unit.

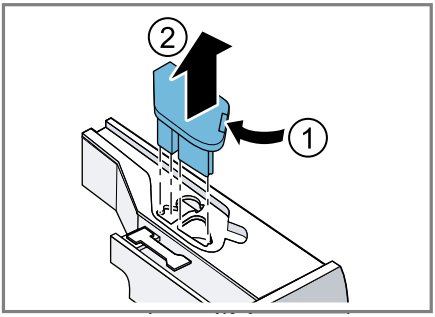

5. Unclip the detergent drawer cover and remove it.

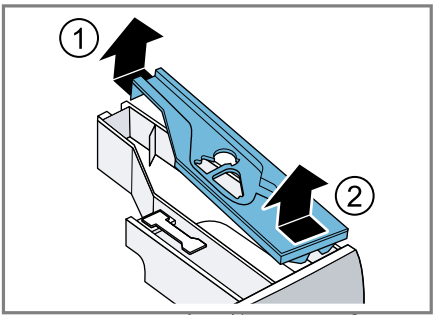

6. Empty the detergent drawer.

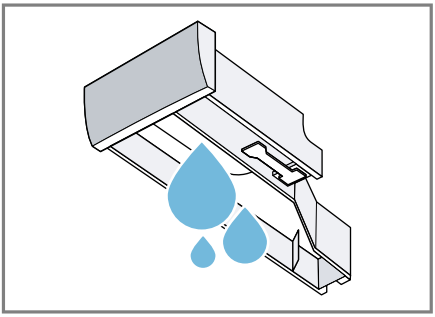

7. Clean the pump unit with a damp cloth.

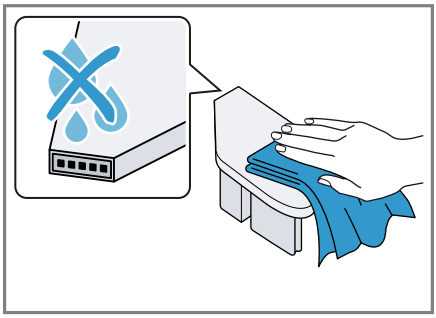

8. Clean the detergent drawer and the cover with a soft, damp cloth or hand shower.

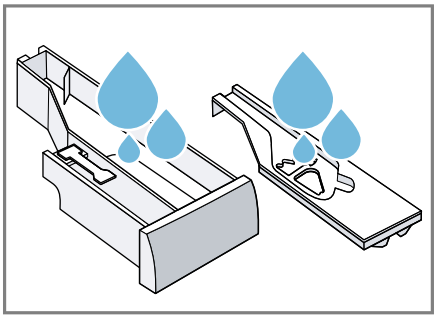

9. Dry the detergent drawer, cover and pump unit and reinsert them.

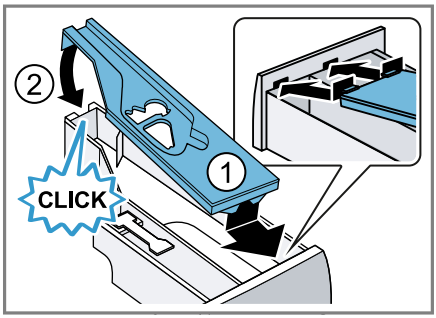

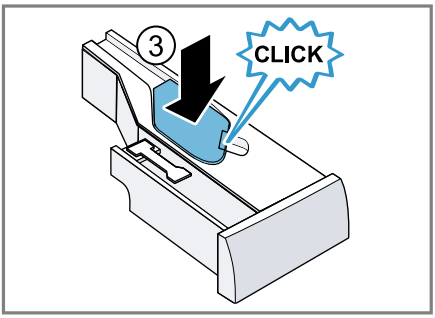

10. Clean the housing of the detergent drawer in the appliance.

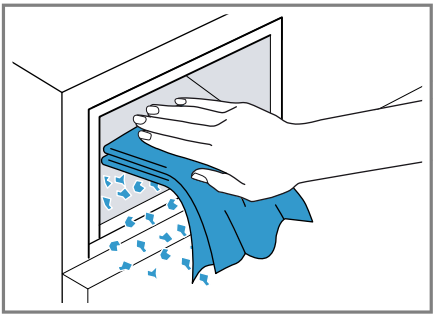

11. Push in the detergent drawer.

19.3 Cleaning the drain pump

Clean the drain pump regularly, at least once a year, as well as in the event of faults, e.g. blockages or rattling noises.

Emptying the drain pump

1. Turn off the tap.
2. Put the appliance into standby mode.
   → *"Put the appliance into standby mode", Page 35*
3. Disconnect the appliance's mains plug from the power supply.
4. Open and remove the maintenance flap.

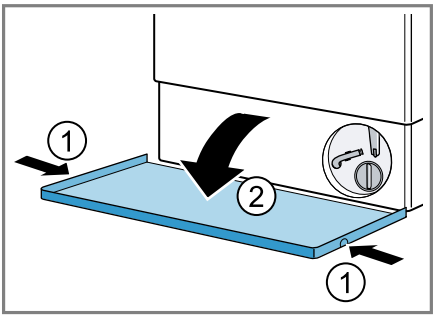

5. Slide a sufficiently large container under the opening.

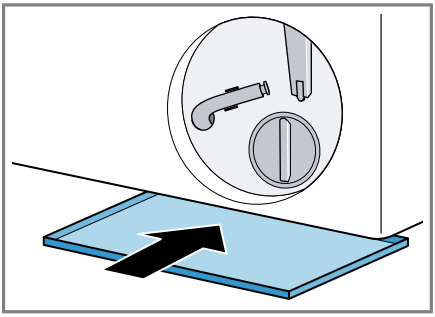

6. Take the drain hose out of the holder.

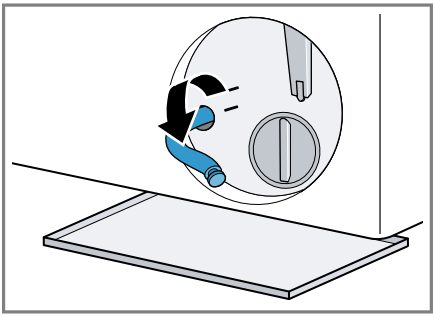

7. ⚠ **CAUTION - Risk of scalding!**
When you wash at high temperatures, the detergent solution gets hot.
- Do not touch the hot detergent solution.

To allow the detergent solution to flow out into the container, remove the sealing cap.

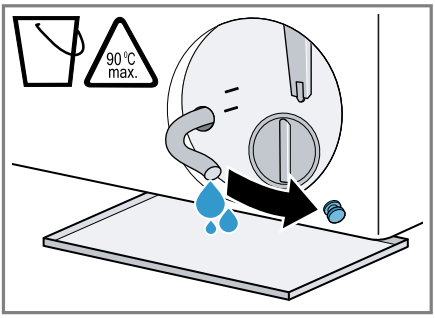

8. Firmly press on the sealing cap.

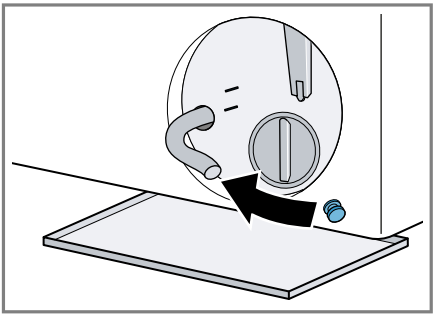

9. Insert the drain hose into the holder.

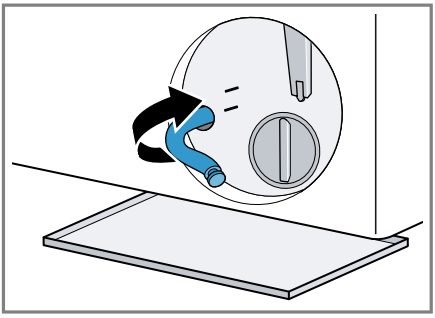

Cleaning the drain pump

Requirement: The drain pump is empty. → *Page 43*

1. Since water may remain in the drain pump, unscrew the pump cap carefully.
   – The filter insert in the pump housing may become stuck due to coarse particles of dirt. Loosen the dirt and remove the filter insert.

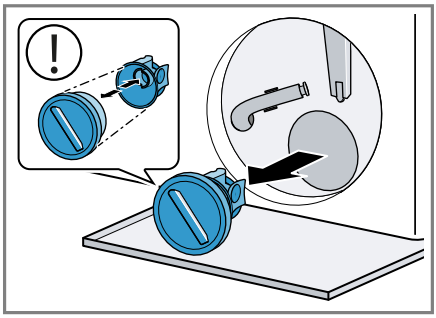

The pump cap is comprised of two parts which can be taken apart for cleaning.

2. Clean the interior, the thread on the pump cap and the pump housing.

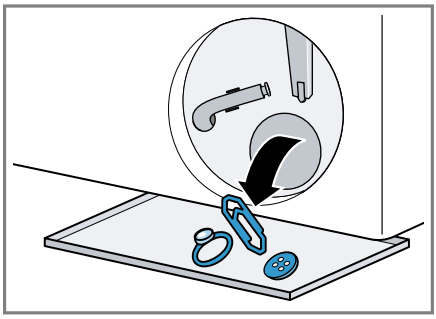

3. Ensure that both impellers can turn.

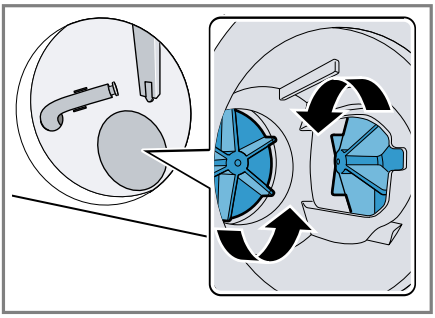

4. Insert the pump cap.
   – Ensure that the parts of the pump cap are correctly assembled.

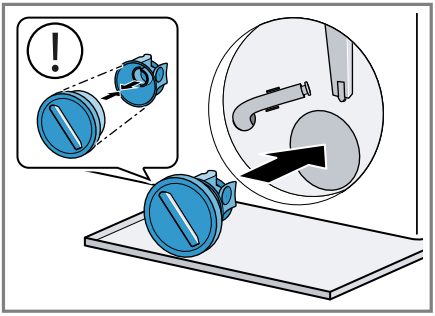

5. Screw the pump cap as far as it will go.

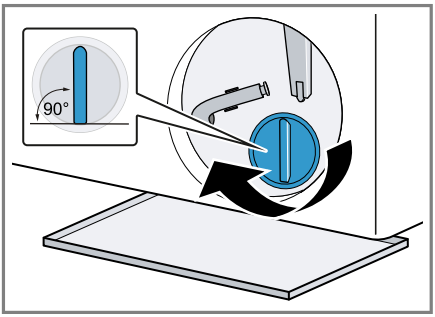

The handle on the pump cap must be in a vertical position.

6. Insert and close the maintenance flap.

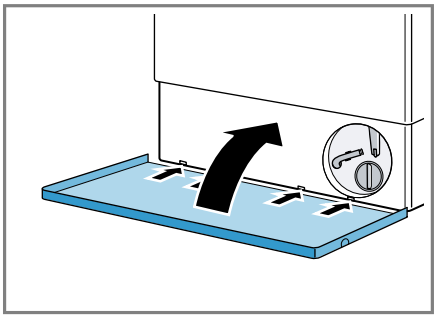

19.4 Cleaning the intake opening in the rubber gasket

Regularly check the intake opening in the rubber gasket for any blockages and clean the intake opening.

1. Open the appliance door.
2. Remove any blockages from the intake opening.

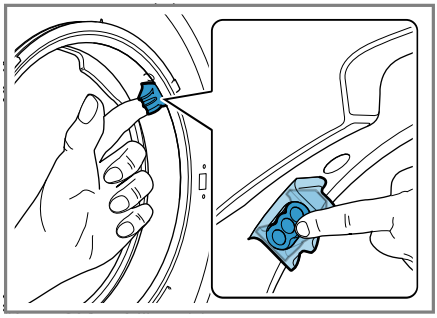

Note: Do not use any sharp or pointed objects.

20 Troubleshooting

You can rectify minor faults on your appliance yourself. Read the troubleshooting information before contacting after-sales service. This will avoid unnecessary costs.

⚠ **WARNING**
Risk of electric shock!
Incorrect repairs are dangerous.
- Repairs to the appliance should only be carried out by trained specialist staff.
- Only use genuine spare parts when repairing the appliance.
- If the power cord of this appliance is damaged, it must be replaced by the manufacturer, the manufacturer's Customer Service or a similarly qualified person in order to prevent any risk.

Fault	Cause and troubleshooting
The display goes out and ⏻ flashes.	Energy-saving mode is active ▸ Press ▷II. ✔ The display lights up again.
"E:10 / -00 / -10 / -20"	The pump for the intelligent dosing system is blocked. 1. Put the appliance into standby mode. 2. Clean the pump unit. → *"Cleaning the detergent drawer", Page 41* 3. Switch the appliance on. 4. If the display appears again after cleaning the pump unit, or the programme cannot be started, call customer service. → *"Customer Service", Page 60* **Note:** You can deactivate and manually dose the intelligent dosing system until the fault is rectified.
"E:30 / -80"	Drain pump is blocked. ▸ Clean the drain pump. → *Page 43*
	Pump cover is not correctly assembled. ▸ Correctly assemble the pump cover.
	The pump cap is not fully screwed in. ▸ Ensure that the pump cap is screwed in all the way into the appliance. The handle on the pump cap must be in a vertical position.
	Drain pipe or water outlet hose is blocked. ▸ Clean the drain pipe and the water outlet hose.
	Drain pipe or water drain hose is caught or jammed.

Fault	Cause and troubleshooting
"E:30 / -80"	▸ Ensure that the drain pipe and water drain hose are not kinked or trapped.
	The water outlet hose is connected too high. ▸ Install the water outlet hose at a maximum height of 1 metre.
	Unapproved extension installed on the water drain hose. ▸ Remove any unapproved extensions from the water hose. → *"Connecting the appliance", Page 15*
	Detergent dosage is too high. ▸ Immediate measure: Mix one tablespoon of fabric softener with 0.5 litres of water and pour the mixture into the compartment for manual dosing (not for outdoor clothing, sportswear or items stuffed with down). ▸ If intelligent dosing is activated, reduce the basic dosage. → *Page 37* ▸ If you dose manually, reduce the amount of detergent for the next washing cycle with the same load.
"E:36 / -25 / -26"	Drain pump is blocked. ▸ Clean the drain pump. → *Page 43*
"H:32"	The unbalanced load detection system has interrupted the spin cycle because the laundry is unevenly distributed. ▸ Redistribute the laundry in the drum. **Note:** Where possible, mix large and small items in the drum. Different sized items of laundry distribute themselves better during the spin cycle.
"E:30 / -10" and/or	The water pressure is low. No remedial action possible.
	The filter in the water inflow is blocked. ▸ Clean the water inflow filter.
	The tap is turned off. ▸ Turn on the tap.
	The water inlet hose is kinked or jammed. ▸ Ensure that the water inlet hose is not kinked or jammed.

Fault	Cause and troubleshooting
"E:35 / -10"	There is water in the base trough. ▸ Turn off the water tap. ▸ Call the after-sales service. → *"Customer Service", Page 60*
	The appliance is leaking. ▸ Turn off the water tap. ▸ Call the after-sales service. → *"Customer Service", Page 60*
	The detergent drawer has not been pushed in fully. ▸ Push in the detergent drawer until the symbol goes out.
	The pump unit is not inserted. 1. Insert the pump unit into the detergent drawer. → *"Cleaning the detergent drawer", Page 41* 2. Push in the detergent drawer until the symbol goes out.
lights up.	The temperature is too high. ▸ Wait until the temperature has dropped. ▸ Cancel the programme. → *"Cancelling the washing programme", Page 35*
	Water level is too high. ▸ Select a suitable programme for draining. → *"Programmes", Page 28*
flashes.	Door is not closed. ▸ Close the door.
	Laundry is caught in the door. ▸ Remove any trapped laundry.
: flashes.	The automatic voltage control system detects an unauthorised voltage under-usage. ▸ No remedial action possible. **Note:** If the power supply is stable, the programme continues to run as normal.
	Voltage under-usage may cause extension of a programme. No remedial action possible.

Fault	Cause and troubleshooting
	Detergent dosage is too high. ▸ Immediate measure: Mix one tablespoon of fabric softener with 0.5 litres of water and pour the mixture into the compartment for manual dosing (not for outdoor clothing, sportswear or items stuffed with down). ▸ If intelligent dosing is activated, reduce the basic dosage. → *Page 37* ▸ If you dose manually, reduce the amount of detergent for the next washing cycle with the same load.
	Drum cleaning is required. ▸ → *"Cleaning the drum", Page 41*
"H:95" lights up alternately with "End".	The water pressure is low. ▸ See → *"E:30 / -10 and/or ", Page 47*
All other error codes.	Malfunction **1.** Switch the appliance off and then on again. **2.** If the message appears again, disconnect the appliance from the power supply for at least 30 seconds by pulling out the plug or by switching off the relevant circuit breaker in the fuse box. ✔ If the fault was a one-off, the message disappears. **3.** If the message appears again, call the after-sales service. Please specify the exact error message when calling. → *"Customer Service", Page 60*
The drying time is too long.	The ambient temperature is greater than 30 °C. ▸ Ensure that the ambient temperature is below 30 °C.
	Insufficient air circulation at the appliance's installation location. ▸ Ventilate the appliance's installation location.
	Fluff has accumulated in the drum. ▸ Run the **Cottons 90°C** programme without any laundry or detergent.
Creasing.	The load is too large.
	The laundry lies in the drum for too long after drying. **1.** Remove the laundry from the drum as soon as the drying programme has finished. **2.** Spread the items of laundry for cooling.
	Unsuitable programme for the type of fabric.

Fault	Cause and troubleshooting
Creasing.	▸ Set the suitable programme for the type of fabric.
	Easy-Care fabrics are dried for too long.
The appliance is not working.	The mains plug of the power cord is not plugged in. ▸ Connect the appliance to the power supply.
	The circuit breaker in the fuse box has tripped. ▸ Check the circuit breaker in the fuse box.
	There has been a power cut. ▸ Check whether the lighting in your room or other appliances are working.
	There is a software fault. ▸ To restart the appliance, press and hold ⏻ for approximately 5 seconds.
The programme does not start.	⏯ has not been pressed. ▸ Press ⏯.
	Door is not closed. ▸ Close the door.
	Childproof lock is activated. ▸ Deactivate childproof lock. → *"Deactivating the childproof lock", Page 36*
	⏲ **Finish in** is activated. ▸ Check whether ⏲ **Finish in** is activated. → *"Buttons", Page 25*
	Laundry is caught in the door. ▸ Remove any trapped laundry.
	The pump for the intelligent dosing system is blocked. **1.** Put the appliance into standby mode. **2.** Clean the pump unit. → *"Cleaning the detergent drawer", Page 41* **3.** Switch the appliance on. **4.** If the display appears again after cleaning the pump unit, or the programme cannot be started, call customer service. → *"Customer Service", Page 60* **Note:** You can deactivate and manually dose the intelligent dosing system until the fault is rectified.
	The detergent drawer has not been pushed in fully. ▸ Push in the detergent drawer until the symbol goes out.

Fault	Cause and troubleshooting
The door cannot be opened.	The temperature is too high. ▸ Wait until the temperature has dropped. ▸ Cancel the programme. → *"Cancelling the washing programme", Page 35*
	Water level is too high. ▸ Select a suitable programme for draining. → *"Programmes", Page 28*
	Power failure. ▸ Open the door using the emergency release. → *"Emergency release", Page 59*
The water is not draining.	Drain pipe or water outlet hose is blocked. ▸ Clean the drain pipe and the water outlet hose.
	Drain pipe or water drain hose is caught or jammed. ▸ Ensure that the drain pipe and water drain hose are not kinked or trapped.
	Drain pump is blocked. ▸ Clean the drain pump. → *Page 43*
	The water outlet hose is connected too high. ▸ Install the water outlet hose at a maximum height of 1 metre.
	Pump cover is not correctly assembled. ▸ Correctly assemble the pump cover.
	Detergent dosage is too high. ▸ Immediate measure: Mix one tablespoon of fabric softener with 0.5 litres of water and pour the mixture into the compartment for manual dosing (not for outdoor clothing, sportswear or items stuffed with down). ▸ If intelligent dosing is activated, reduce the basic dosage. → *Page 37* ▸ If you dose manually, reduce the amount of detergent for the next washing cycle with the same load.
	Unapproved extension installed on the water drain hose. ▸ Remove any unapproved extensions from the water hose. → *"Connecting the appliance", Page 15*
	The pump cap is not fully screwed in.

Fault	Cause and troubleshooting
The water is not draining.	▸ Ensure that the pump cap is screwed in all the way into the appliance. The handle on the pump cap must be in a vertical position.
Water is not flowing in. Detergent is not being dispensed.	▷II has not been pressed. ▸ Press ▷II.
	The filter in the water inflow is blocked. ▸ Clean the water inflow filter.
	The tap is turned off. ▸ Turn on the tap.
	The water inlet hose is kinked or jammed. ▸ Ensure that the water inlet hose is not kinked or jammed.
The spin cycle runs several times.	The unbalanced load detection system eliminates an imbalance by repeatedly redistributing the laundry. ▸ Not a fault – no action required. **Note:** When loading, where possible, place large and small items of laundry together in the drum. Different sized items of laundry distribute themselves better during the spin cycle.
No water is visible in the drum.	Water is below the visible area. ▸ Not a fault – no action required. ▸ Do not add any extra water to the appliance while it is operating.
Vibrations and movement of the appliance whilst spinning.	Appliance is not correctly aligned. ▸ → *"Aligning the appliance", Page 16*
	The appliance feet are not fixed. ▸ Secure the appliance feet. → *"Aligning the appliance", Page 16*
	Transit bolts have not been removed. ▸ → *"Removing the transit bolts", Page 14*.
Drum rotates, water does not flow in.	Load detection is active. ▸ Not a fault – no action required. **Note:** The load detection can take up to two minutes.

Fault	Cause and troubleshooting
Heavy foam build-up	Detergent dosage is too high. ▸ Immediate measure: Mix one tablespoon of fabric softener with 0.5 litres of water and pour the mixture into the compartment for manual dosing (not for outdoor clothing, sportswear or items stuffed with down). ▸ If intelligent dosing is activated, reduce the basic dosage. → *Page 37* ▸ If you dose manually, reduce the amount of detergent for the next washing cycle with the same load.
i-DOS 1 i-DOS 2 cannot be actuated.	Intelligent dosing is not intended for this programme. ▸ Use the manual dosing compartment. → *Page 37*
	Programme progress does not allow intelligent dosing. No remedial action possible.
High spin speed not reached.	A low spin speed is selected. ▸ The next time you run a wash cycle, set a higher spin speed.
	Reduced Ironing is activated. ▸ Select the programmes that are suitable for the type of fabric.
	Unbalance load detection system is using a reduced spin speed to eliminate an unbalance. ▸ Redistribute the laundry in the drum. **Note:** Where possible, mix large and small items in the drum. Different sized items of laundry distribute themselves better during the spin cycle. ▸ Start the **Spin** programme.
The spin programme does not start.	Drain pipe or water outlet hose is blocked. ▸ Clean the drain pipe and the water outlet hose.
	Drain pipe or water drain hose is caught or jammed. ▸ Ensure that the drain pipe and water drain hose are not kinked or trapped.
	The unbalanced load detection system has interrupted the spin cycle because the laundry is unevenly distributed. ▸ Redistribute the laundry in the drum. **Note:** Where possible, mix large and small items in the drum. Different sized items of laundry distribute themselves better during the spin cycle.

Fault	Cause and troubleshooting
The spin programme does not start.	▸ Start the **Spin** programme.
Water is leaking out at the water inlet hose.	Water inlet hose is not correctly/securely connected. 1. Connect the water supply hose correctly. → *"Connecting the water inlet hose", Page 15* 2. Tighten the screw connection.
Water is leaking out at the water outlet hose.	The water outlet hose is damaged. ▸ Replace the damaged water outlet hose.
	Water outlet hose is not connected correctly. ▸ Connect the water outlet hose correctly. → *"Water outlet connection types", Page 16*
Insufficient cleaning.	Basic dosage not adjusted. ▸ If intelligent dosing is activated, adjust the basic dosage. → *Page 37*
	Detergent or care products have congealed in dispensers of the intelligent dosing system. 1. Check whether the detergent used is suitable. → *"Detergents and care products", Page 32* 2. Drain the dispenser. → *"Cleaning the detergent drawer", Page 41* 3. Clean the dispenser. 4. Refill the dispenser. → *"Pouring liquid detergent and fabric softener into the dispensers", Page 36*
	Unsuitable detergent added to the dispenser of the intelligent dosing system. 1. Check whether the detergent used is suitable. → *"Detergents and care products", Page 32* 2. Drain the dispenser. → *"Cleaning the detergent drawer", Page 41* 3. Clean the dispenser. 4. Refill the dispenser. → *"Pouring liquid detergent and fabric softener into the dispensers", Page 36*
The spin result is not satisfactory. The laundry is too wet/too damp.	A low spin speed is selected. ▸ The next time you run a wash cycle, set a higher spin speed. ▸ Start the **Spin** programme.
	Reduced Ironing is activated. ▸ Select the programmes that are suitable for the type of fabric.

Fault	Cause and troubleshooting
The spin result is not satisfactory. The laundry is too wet/too damp.	Drain pipe or water outlet hose is blocked. ▸ Clean the drain pipe and the water outlet hose.
	Drain pipe or water drain hose is caught or jammed. ▸ Ensure that the drain pipe and water drain hose are not kinked or trapped.
	The unbalanced load detection system has interrupted the spin cycle because the laundry is unevenly distributed. ▸ Redistribute the laundry in the drum. **Note:** Where possible, mix large and small items in the drum. Different sized items of laundry distribute themselves better during the spin cycle. ▸ Start the **Spin** programme.
	Unbalance load detection system is using a reduced spin speed to eliminate an unbalance. ▸ Redistribute the laundry in the drum. **Note:** Where possible, mix large and small items in the drum. Different sized items of laundry distribute themselves better during the spin cycle. ▸ Start the **Spin** programme.
Detergent residue on the damp washing.	Detergents may contain water-insoluble substances that deposit on the laundry. ▸ Start the **Rinse** programme.
	Unsuitable detergent added to the dispenser of the intelligent dosing system. **1.** Check whether the detergent used is suitable. → *"Detergents and care products", Page 32* **2.** Drain the dispenser. → *"Cleaning the detergent drawer", Page 41* **3.** Clean the dispenser. **4.** Refill the dispenser. → *"Pouring liquid detergent and fabric softener into the dispensers", Page 36*
	Basic dosage not adjusted. ▸ If intelligent dosing is activated, reduce the basic dosage. → *Page 37*
Detergent residue on the dry laundry.	Detergents may contain water-insoluble substances that deposit on the laundry. ▸ Brush out the laundry after washing and drying.

Fault	Cause and troubleshooting
Detergent residue on the dry laundry.	Unsuitable detergent added to the dispenser of the intelligent dosing system. 1. Check whether the detergent used is suitable. → *"Detergents and care products", Page 32* 2. Drain the dispenser. → *"Cleaning the detergent drawer", Page 41* 3. Clean the dispenser. 4. Refill the dispenser. → *"Pouring liquid detergent and fabric softener into the dispensers", Page 36*
	Basic dosage not adjusted. ▸ If intelligent dosing is activated, reduce the basic dosage. → *Page 37*
Home Connect is not working properly.	Different causes are possible. ▸ Go to www.home-connect.com.
No connection to the home network.	Wi-Fi is switched off. ▸ Activating Wi-Fi on the appliance. → *"Activating Wi-Fi on the appliance", Page 39*.
	Wi-Fi is activated but a connection to your home network cannot be established. 1. Ensure that the home network is available. 2. Reconnect the appliance to the home network. → *"Setting up Home Connect", Page 38*
▷II cannot be operated.	Drying phase active. ▸ Not a fault – no action required.
Drying programme does not start.	Door is not closed. ▸ Close the door.
	No drying programme is selected. ▸ Select a suitable drying programme. → *"Programmes", Page 28*
The programme duration changes during the wash cycle.	The programme operation is optimised electronically. This may change the programme duration. ▸ Not a fault – no action required.
	The unbalanced load detection system eliminates an imbalance by repeatedly redistributing the laundry. ▸ Not a fault – no action required. **Note:** When loading, where possible, place large and small items of laundry together in the drum. Different sized items of laundry distribute themselves better during the spin cycle.

Fault	Cause and troubleshooting
The programme duration changes during the wash cycle.	Foam detection system switches on a rinse cycle if foam build-up is too high. ▸ Not a fault – no action required.
Drum jerks after the programme starts.	This is caused by an internal motor test. ▸ Not a fault – no action required.
Fluff on the laundry.	Fluff has accumulated in the drum. ▸ Run the **Cottons 90°C** programme without any laundry or detergent.
The laundry is too damp.	Unsuitable programme for the type of fabric.
	There has been a power cut. ▸ Check whether the lighting in your room or other appliances are working.
	The load is too large.
	After the end of the programme, warm laundry feels damper than it actually is. **1.** Remove the laundry from the drum as soon as the drying programme has finished. **2.** Spread the items of laundry for cooling.
	Drying target not adjusted.
	Load too small.
	Water tap is closed during the drying phase. ▸ Make sure that the water tap also remains open during the drying phase.
	The ambient temperature is greater than 30 °C. ▸ Ensure that the ambient temperature is below 30 °C.
	Insufficient air circulation at the appliance's installation location. ▸ Ventilate the appliance's installation location.
	The water pressure is low. No remedial action possible.
	Laundry is not spun sufficiently. ▸ Always select the highest possible spin speed for the washing programme in question.
	Thick and multi-layered fabrics require a longer drying time. ▸ Set a timed programme for the subsequent drying. → *"Programmes", Page 28*

Fault	Cause and troubleshooting
Loud noises during the spin cycle.	Appliance is not correctly aligned. ▸ → *"Aligning the appliance", Page 16*
	The appliance feet are not fixed. ▸ Secure the appliance feet. → *"Aligning the appliance", Page 16*
	Transit bolts have not been removed. ▸ → *"Removing the transit bolts", Page 14*.
Banging noises, rattling in the drain pump.	Foreign bodies have got into the drain pump. ▸ → *"Cleaning the drain pump", Page 43*
Slurping, rhythmical suction noise.	The drain pump is active, the detergent solution is pumped out. ▸ Not a fault – normal operating noise.
Fan noise during the washing phase.	Process fan is active. ▸ Not a fault – normal operating noise.
Longer, whirring noise before the start of the wash cycle or fabric softening.	Intelligent dosing system dispenses detergent or care products. ▸ Not a fault – normal operating noise.
Brief whirring noise after switching on the appliance.	Intelligent dosing system carries out a function test. ▸ Not a fault – normal operating noise.
Spin noise during the drying phase.	Thermal spinning is active. ▸ Not a fault – normal operating noise.
Rushing, hissing noise.	Water is flushed under pressure into the detergent drawer. ▸ Not a fault – normal operating noise.
Water inlet noise during the drying phase.	Drying phase requires water. 1. Not a fault. 2. Make sure that the water tap also remains open during the drying phase.
Odours have formed in the appliance.	Humidity and detergent residue may promote the formation of bacteria. ▸ → *"Cleaning the drum", Page 41* ▸ If you are not using the appliance, leave the door and detergent drawer open so that residual water can evaporate.

20.1 Emergency release

Releasing the door

Requirement: The drain pump is empty. → *Page 43*

1. **ATTENTION!** Escaping water may cause material damage.
   - Do not open the door if you can see water through the glass.

   Pull the emergency release downwards with a tool and release.

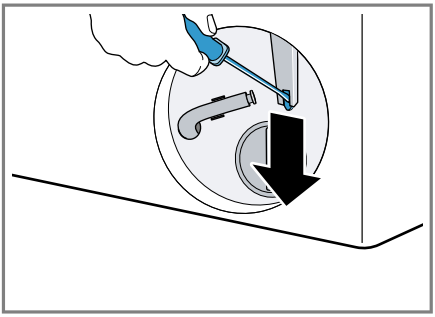

✔ The door lock is released.

2. Insert the maintenance flap and lock it into place.
3. Close the maintenance flap.

21 Transportation, storage and disposal

21.1 Removing the appliance

1. Turn off the tap.
2. Empty the water inlet hose.
3. Put the appliance into standby mode.
   → *"Put the appliance into standby mode", Page 35*
4. Unplug the appliance's mains plug.
5. Drain the water.
   → *"Cleaning the drain pump", Page 43*
6. Detach the hoses.
7. Empty the dispensers.

21.2 Inserting the transit bolts

Secure the appliance before transportation using transit bolts in order to prevent transport damage.

1. Use a screwdriver to remove the 4 cover caps.

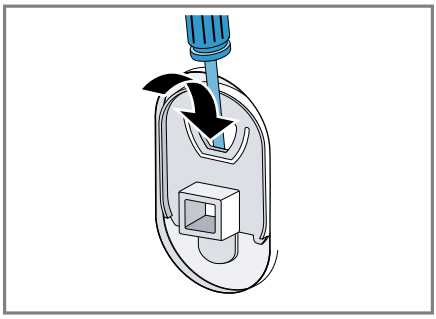

   Keep the cover caps.
2. Insert the 4 transit bolts.
   → *"Removing the transit bolts", Page 14*

21.3 Using the appliance again

- For further information, see
  → *"Installation and connection", Page 13* and
  → *"Starting an empty washing cycle", Page 17*.

21.4 Disposing of old appliance

Valuable raw materials can be re-used by recycling.

⚠ **WARNING**
Risk of harm to health!
Children can lock themselves in the appliance, thereby putting their lives at risk.

- Do not install the appliance behind a door as this may obstruct the appliance door or prevent it from opening.
- With redundant appliances, unplug the power cord. Then cut through the cord and damage the lock on the appliance door beyond repair so that the appliance door will no longer close.

1. Unplug the appliance from the mains.
2. Cut through the power cord.
3. Dispose of the appliance in an environmentally friendly manner.

   Information about current disposal methods are available from your specialist dealer or local authority.

This appliance is labelled in accordance with European Directive 2012/19/EU concerning used electrical and electronic appliances (waste electrical and electronic equipment - WEEE). The guideline determines the framework for the return and recycling of used appliances as applicable throughout the EU.

22 Customer Service

Function-relevant genuine spare parts according to the corresponding Ecodesign Order can be obtained from Customer Service for a period of at least 10 years from the date on which your appliance was placed on the market within the European Economic Area.

Note: Under the terms of the manufacturer's warranty the use of Customer Service is free of charge.

Detailed information on the warranty period and terms of warranty in your country is available from our after-sales service, your retailer or on our website.
If you contact Customer Service, you will require the product number (E-Nr.), the production number (FD) and the consecutive numbering (Z-Nr.) of your appliance.
The contact details for Customer Service can be found in the enclosed Customer Service directory or on our website.

22.1 Product number (E-Nr.), production number (FD) and consecutive numbering (Z-Nr.)

You can find the product number (E-Nr.), the production number (FD) and the consecutive numbering (Z-Nr.) on the appliance's rating plate.
Depending on the model, the rating plate is located:

- On the inside of the door.
- On the inside of the maintenance flap.
- On the rear of the appliance.

Make a note of your appliance's details and the Customer Service telephone number to find them again quickly.

22.2 AQUA-STOP guarantee

In addition to warranty claims against the seller under the purchase agreement and in addition to our manufacturer's warranty, we offer compensation under the following conditions.

- If our Aqua-Stop system is defective and causes water damage, we will make good the damage for private users. To ensure protection from water damage, the appliance must be connected to the power supply.
- The liability guarantee is valid for the service life of the appliance.
- A claim can only be made under the guarantee if the appliance has been correctly installed and connected with Aqua-Stop according to our instructions; this also includes correctly fitting the Aqua-Stop extension (genuine accessory). Our guarantee does not cover defective supply lines or fittings up to the Aqua-Stop connection on the tap.
- If your appliance is fitted with Aqua-Stop, you can in principle leave your appliance unattended during operation and the tap turned on afterwards. The tap only needs to be turned off if you are away from home for a long period, e.g. on holiday for several weeks.

23 Consumption values

The following information is provided in accordance with the EU Ecodesign Regulation. The values specified for programmes other than **Eco 40-60** are only given as a guide and were determined in accordance with the applicable standards EN60456 and EN62512. The automatic dosing function has been deactivated for this purpose.
Note on the comparison test: Deactivate the automatic dosing function unless this function is the object of the test.

Programme	Load (kg)	Programme duration (hr:min)[1]	Energy consumption (kWh/cycle)[1]	Water consumption (l/cycle)[1]	Maximum temperature (°C) 5 mins[1]	Spin speed (rpm)[1]	Residual moisture (%)[1]
Eco 40-60[2]	10.5	4:00	1.110	76.0	39	1390	53.00
Eco 40-60[2]	5.3	3:00	0.500	50.0	30	1400	53.00
Eco 40-60[2]	2.5	2:20	0.185	35.0	24	1400	53.00
Eco 40-60 + Wash&Dry + [2]	6.0	8:20	3.750	90.0	23	-	-0.1
Eco 40-60 + Wash&Dry+ [2]	3.0	4:20	2.000	52.0	22	-	-0.1
Cottons 20 °C	10.0	4:05	0.550	90.0	25	1400	50.00
Cottons 40 °C	10.0	4:05	1.300	90.0	40	1400	50.00
Cottons 60 °C	10.0	4:05	2.200	90.0	60	1400	50.00
Cottons 40 °C + Prewash	10.0	4:25	1.500	105.0	40	1400	50.00
Easy Care 40 °C	4.0	2:35	0.900	68.0	43	1400	30.00
Mixed load 40 °C	4.0	1:10	0.750	50.0	41	1400	45.00

[1] Due to the influence of water pressure, hardness and inlet temperature, ambient temperature, type, amount and soiling of laundry, detergent used, fluctuations in the power supply and the selected additional functions, the actual values may deviate from the stated values.
[2] Test programme in accordance with the EU Ecodesign Directive and the EU Energy Labelling Regulation with cold water (15 °C).

Programme	Load (kg)	Programme duration (hr:min)[1]	Energy consumption (kWh/cycle)[1]	Water consumption (l/cycle)[1]	Maximum temperature (°C) 5 mins[1]	Spin speed (rpm)[1]	Residual moisture (%)[1]
Wool 30 °C	2.0	0:41	0.180	45.0	22	800	30.00

[1] Due to the influence of water pressure, hardness and inlet temperature, ambient temperature, type, amount and soiling of laundry, detergent used, fluctuations in the power supply and the selected additional functions, the actual values may deviate from the stated values.
[2] Test programme in accordance with the EU Ecodesign Directive and the EU Energy Labelling Regulation with cold water (15 °C).

24 Technical data

Appliance height	84.8 cm
Appliance width	59.8 cm
Appliance depth	62.2 cm
Appliance depth with door closed	65.4 cm
Appliance depth with door open	114.2 cm
Weight	84.6 kg
Maximum load	10.5 kg
Mains voltage	220-240 V, 50 Hz
Minimum installation protection	10 A
Nominal power	1900-2300 W
Power consumption	■ Standby mode: 0.50 W ■ Left-on mode: 0.50 W ■ Time until the networked standby mode is set (Wi-Fi): 5 mins ■ Networked standby mode (Wi-Fi): 2.00 W
Water pressure	■ Minimum: 100 kPa (1 bar) ■ Maximum: 1000 kPa (10 bar)
Length of the water inlet hose	150 cm
Length of the water outlet hose	150 cm
Length of the power cord	182 cm

This product contains light sources from energy efficiency class F. These light sources are available as a spare part and must only be replaced by trained specialist staff.

More information about your model can be found online at https://eprel.ec.europa.eu/qr/1450887[1]. This web address is linked to the official EU EPREL product database.

25 Declaration of Conformity

BSH Hausgeräte GmbH hereby declares that the appliance with Home Connect functionality conforms to the essential requirements and other relevant provisions of Directive 2014/53/EU.
A detailed RED Declaration of Conformity can be found online at www.bosch-home.com among the additional documents on the product page for your appliance.

CE

Hereby, BSH Hausgeräte GmbH declares that the appliance with Home Connect functionality is in compliance with relevant statutory requirements.[2]
A detailed Declaration of Conformity can be found online at www.bosch-home.co.uk among the additional documents on the product page for your appliance.[2]

UK CA

2.4 GHz band (2400–2483.5 MHz): Max. 100 mW
5-GHz band (5150–5350 MHz + 5470–5725 MHz): max. 150 mW

!	BE	BG	CZ	DK	DE	EE	IE	EL	ES
	FR	HR	IT	CY	LI	LV	LT	LU	HU
	MT	NL	AT	PL	PT	RO	SI	SK	FI
	SE	NO	CH	TR	IS	UK (NI)			
5 GHz WLAN (Wi-Fi): For indoor use only.									

AL	BA	MD	ME	MK	RS	UK	UA
5 GHz WLAN (Wi-Fi): For indoor use only.							

[1] Only applies to countries in the European Economic Area

[2] Only applies to Great Britain

Thank you for buying a Bosch Home Appliance!

Register your new device on MyBosch now and profit directly from:

- **Expert tips & tricks for your appliance**
- **Warranty extension options**
- **Discounts for accessories & spare-parts**
- **Digital manual and all appliance data at hand**
- **Easy access to Bosch Home Appliances Service**

Free and easy registration – also on mobile phones:
www.bosch-home.com/welcome

Looking for help? You'll find it here.

Expert advice for your Bosch home appliances, help with problems or a repair from Bosch experts.
Find out everything about the many ways Bosch can support you:
www.bosch-home.com/service
Contact data of all countries are listed in the attached service directory.

BSH Hausgeräte GmbH
Carl-Wery-Straße 34
81739 München, GERMANY
www.bosch-home.com

A Bosch Company

9001771432 (040126)
en

Valid within Great Britain:
Imported to Great Britain by
BSH Home Appliances Ltd.
Grand Union House
Old Wolverton Road
Wolverton, Milton Keynes
MK12 5PT
United Kingdom